Flea3 FL3-U3

USB 3.0 Digital Camera

Technical Reference Manual

Version 5.2

Revised 9/27/2012



Point Grey Research® Inc.

12051 Riverside Way • Richmond, BC • Canada • V6W 1K7 • T (604) 242-9937 • www.ptgrey.com

Copyright © 2011-2012 Point Grey Research Inc. All Rights Reserved.

FCC Compliance

This device complies with Part 15 of the FCC rules. Operation is subject to the following two conditions: (1) This device may not cause harmful interference, and (2) this device must accept any interference received, including interference that may cause undesirable operation.

Hardware Warranty

Point Grey Research®, Inc. (Point Grey) warrants to the Original Purchaser that the Camera Module provided with this package is guaranteed to be free from material and manufacturing defects for a period of Two years. Should a unit fail during this period, Point Grey will, at its option, repair or replace the damaged unit. Repaired or replaced units will be covered for the remainder of the original equipment warranty period. This warranty does not apply to units that, after being examined by Point Grey, have been found to have failed due to customer abuse, mishandling, alteration, improper installation or negligence. If the original camera module is housed within a case, removing the case for any purpose other than to remove the protective glass or filter over the sensor voids this warranty. This warranty does not apply to damage to any part of the optical path resulting from removal or replacement of the protective glass or filter over the camera, such as scratched glass or sensor damage.

Point Grey Research, Inc. expressly disclaims and excludes all other warranties, express, implied and statutory, including, but without limitation, warranty of merchantability and fitness for a particular application or purpose. In no event shall Point Grey Research, Inc. be liable to the Original Purchaser or any third party for direct, indirect, incidental, consequential, special or accidental damages, including without limitation damages for business interruption, loss of profits, revenue, data or bodily injury or death.

WEEE

The symbol indicates that this product may not be treated as household waste. Please ensure this product is properly disposed as inappropriate waste handling of this product may cause potential hazards to the environment and human health. For more detailed information about recycling of this product, please contact Point Grey Research.



Trademarks

Point Grey Research, PGR, the Point Grey Research, Inc. logo, Chameleon, Digiclops, Dragonfly, Dragonfly Express, Firefly, Flea, FlyCapture, Gazelle, Grasshopper, Ladybug, Triclops and Zebra are trademarks or registered trademarks of Point Grey Research, Inc. in Canada and other countries.

Table of Contents

1 Welcome to Flea3 USB 3.0 ..... **1**
1.1 Flea3 USB 3.0 Specifications 1
1.1.1 FL3-U3-13S2M (Mono) Imaging Performance 3
1.1.2 FL3-U3-13S2C (Color) Imaging Performance 4
1.1.3 FL3-U3-13Y3M (Mono) Imaging Performance 5
1.1.4 FL3-U3-13E4M (Mono) Imaging Performance 6
1.1.5 FL3-U3-13E4C (Color) Imaging Performance 7
1.1.6 FL3-U3-32S2M (Mono) Imaging Performance 8
1.1.7 FL3-U3-32S2C (Color) Imaging Performance 9
1.1.8 FL3-U3-88S2C (Color) Imaging Performance 10
1.1.9 Flea3 USB 3.0 Camera Comparison 11
1.2 Analog-to-Digital Conversion 12
1.3 Flea3 USB 3.0 Mechanical Properties 13
1.3.1 Physical Description 13
1.3.2 Camera Dimensions 14
1.3.3 Tripod Adapter Dimensions 15
1.3.4 Lens Mounting 15
1.3.4.1 Back Flange Distance 16
1.3.5 Dust Protection 16
1.3.6 Mounting with the Case or Mounting Bracket 16
1.3.7 Infrared Cut-Off Filters 17
1.4 Handling Precautions and Camera Care 18
1.4.1 Case Temperature and Heat Dissipation 18
1.5 Camera Interface and Connectors 20
1.5.1 USB 3.0 Connector 20
1.5.2 Interface Card 20
1.5.3 Interface Cables 21
1.5.4 General Purpose Input/Output (GPIO) 21
2 Getting Started with Flea3 USB 3.0 ..... **22**
2.1 Before You Install 22
2.1.1 Will your system configuration support the camera? 22
2.1.2 Do you have all the parts you need? 22
2.1.3 Do you have a downloads account? 22
2.2 Installing Your Interface Card and Software 23
2.3 Installing Your Camera 24

Copyright ©2011-2012 Point Grey Research Inc.

2.4 Controlling the Camera 25
2.4.1 Using FlyCapture 25
2.4.2 Using Control and Status Registers 25
2.4.2.1 Modes 25
2.4.2.2 Values 26
2.4.2.3 Using the Inquiry Registers 26
2.4.2.4 Using the Absolute Value Registers 26
2.5 Configuring Camera Setup 27
2.5.1 Configuring Camera Drivers 27
2.5.2 Maximum Number of Cameras on a Single Bus 27
3 General Camera Operation 29
3.1 Powering the Camera 29
3.1.1 CAMERA_POWER: 610h 29
3.2 Device Information 29
3.2.1 SERIAL_NUMBER: 1F20h 30
3.2.2 MAIN_BOARD_INFO: 1F24h 30
3.2.3 SENSOR_BOARD_INFO: 1F28h 31
3.2.4 VOLTAGE: 1A50h – 1A54h 31
3.2.5 CURRENT: 1A58h – 1A5Ch 31
3.2.6 TEMPERATURE: 82Ch 32
3.2.7 PIXEL_CLOCK_FREQ: 1AF0h 32
3.2.8 HORIZONTAL_LINE_FREQ: 1AF4h 32
3.3 User Memory Channels 32
3.3.1 MEMORY_SAVE: 618h 33
3.3.2 MEM_SAVE_CH: 620h 33
3.3.3 CUR_MEM_CH: 624h 33
3.3.4 Memory Channel Registers 33
3.4 On-Camera Frame Buffer 35
3.4.1 IMAGE_RETRANSMIT: 634h 36
3.4.2 Example: Retransmitting in Image External Mode Using Registers 36
3.4.3 Example: Storing Images for Later Transmission Using Registers 37
3.5 Non-Volatile Flash Memory 38
3.5.1 DATA_FLASH_CTRL: 1240h 38
3.5.2 DATA_FLASH_DATA: 1244h 38
3.6 Camera Firmware 39
3.6.1 Determining Firmware Version 39
3.6.2 Upgrading Camera Firmware 39
3.6.3 FIRMWARE_VERSION: 1F60h 39

Copyright ©2011-2012 Point Grey Research Inc.

3.6.4 FIRMWARE_BUILD_DATE: 1F64h 40
3.6.5 FIRMWARE_DESCRIPTION: 1F68-1F7Ch 40
4 Input/Output Control 41
4.1 General Purpose Input/Output (GPIO) 41
4.2 GPIO Modes 41
4.2.1 GPIO Mode 0: Input 41
4.2.2 GPIO Mode 1: Output 41
4.2.3 GPIO Mode 2: Asynchronous (External) Trigger 42
4.2.4 GPIO Mode 3: Strobe 42
4.2.5 GPIO Mode 4: Pulse Width Modulation (PWM) 42
4.3 Programmable Strobe Output 42
4.3.1 Synchronizing Image Capture with an Output Trigger or Strobe 43
4.3.2 Example: Setting a GPIO Pin to Strobe (Using the Camera Registers) 44
4.3.3 Example: Setting a GPIO Pin to Strobe (Using the FlyCapture API) 46
4.3.4 Strobe Signal Output Registers 47
4.3.4.1 Strobe Output Registers 47
4.3.4.2 GPIO_STRPAT_CTRL: 110Ch 48
4.3.4.3 GPIO_STRPAT_MASK_PIN: 1118h-1148h 49
4.3.4.4 GPIO_XTRA: 1104h 49
4.4 Pulse Width Modulation (PWM) 50
4.4.1 GPIO_CTRL_PIN: 1110h-1140h 50
4.4.2 GPIO_XTRA_PIN: 1114h-1144h 51
4.5 Serial Communication 51
4.5.1 Serial Output Transaction (Transmitting Data) 52
4.5.1.1 Example: Transmitting Characters to a PC 52
4.5.2 Serial Input Transaction (Receiving Data) 53
4.5.2.1 Example: Receiving Characters from a PC 54
4.5.3 Transmitting and Receiving Data Simultaneously 55
4.5.4 Serial Input/Output Registers 55
4.6 GPIO Electrical Characteristics 59
4.6.1 GPIO0 (Opto-Isolated Input) Circuit 59
4.6.2 GPIO1 (Opto-Isolated Output) Circuit 60
4.6.3 GPIO 2/3 (Bi-Directional) Circuit 61
5 Video Formats, Modes and Frame Rates 63
5.1 Video Modes Overview 63
5.1.1 Video Mode Descriptions 64
5.1.2 Calculating Format 7 Frame Rates 66
5.2 Pixel Formats 66

Copyright ©2011-2012 Point Grey Research Inc.

5.2.1 Raw 67
5.2.2 Mono 67
5.2.3 RGB 67
5.2.4 YUV 67
5.2.5 Y16 (16-bit Mono) Image Acquisition 68
5.2.5.1 DATA_DEPTH: 630h 68
5.2.6 Y8 or Y16 Raw Bayer Output 68
5.2.6.1 BAYER_MONO_CTRL: 1050h 68
5.3 Supported Formats, Modes and Frame Rates 69
5.3.1 FL3-U3-13S2 Video Modes 69
5.3.1.1 FL3-U3-13S2 Standard Formats, Modes and Frame Rates 69
5.3.1.2 FL3-U3-13S2 Custom Formats, Modes and Frame Rates 69
5.3.2 FL3-U3-13Y3 Video Modes 71
5.3.2.1 FL3-U3-13Y3 Standard Formats, Modes and Frame Rates 71
5.3.2.2 FL3-U3-13Y3 Custom Formats, Modes and Frame Rates 71
5.3.3 FL3-U3-13E4 Video Modes 72
5.3.3.1 FL3-U3-13E4 Standard Formats, Modes and Frame Rates 72
5.3.3.2 FL3-U3-13E4 Custom Formats, Modes and Frame Rates 72
5.3.4 FL3-U3-32S2 Video Modes 73
5.3.4.1 FL3-U3-32S2 Standard Formats, Modes and Frame Rates 73
5.3.4.2 FL3-U3-32S2 Custom Formats, Modes and Frame Rates 74
5.3.5 FL3-U3-88S2 Video Modes 75
5.3.5.1 FL3-U3-88S2C Standard Formats, Modes and Frame Rates 75
5.3.5.2 FL3-U3-88S2C Custom Formats, Modes and Frame Rates 75
5.4 Video Format, Mode, and Frame Rate Settings 76
5.4.1 FRAME_RATE: 83Ch 76
5.4.2 CURRENT_FRAME_RATE: 600h 77
5.4.3 CURRENT_VIDEO_MODE: 604h 78
5.4.4 CURRENT_VIDEO_FORMAT: 608h 78
5.4.5 Example: Setting a Standard Video Mode, Format and Frame Rate Using the FlyCapture API 78
6 Image Acquisition 79
6.1 Global Shutter 79
6.2 Rolling Shutter 79
6.3 Rolling Shutter with Global Reset 80
6.4 Asynchronous Triggering 81
6.4.1 External Trigger Timing 81
6.4.2 Minimum Trigger Pulse Length 82
6.4.3 Maximum Frame Rate in External Trigger Mode 82

Copyright ©2011-2012 Point Grey Research Inc.

6.4.4 Camera Behavior Between Triggers 83
6.4.5 Changing Video Modes While Triggering 83
6.4.6 Trigger Modes 84
6.4.6.1 Trigger Mode 0 (“Standard External Trigger Mode”) 84
6.4.6.2 Trigger Mode 1 (“Bulb Shutter Mode”) 84
6.4.6.3 Trigger Mode 15 (“Multi-Shot Trigger Mode”) 85
6.4.7 Example: Asynchronous Hardware Triggering (Using the Camera Registers) 86
6.4.8 Example: Asynchronous Hardware Triggering (Using the FlyCapture API) 88
6.4.9 Asynchronous Software Triggering 88
6.4.10 Asynchronous Trigger Settings 89
6.4.10.1 TRIGGER_MODE: 830h 90
6.4.10.2 TRIGGER_DELAY: 834h 90
6.4.10.3 PIO_DIRECTION: 11F8h 91
6.4.10.4 SOFTWARE_TRIGGER: 62Ch 91
6.4.10.5 ISO_CHANNEL/ISO_SPEED: 60Ch 91
6.4.10.6 ISO_EN/CONTINUOUS_SHOT: 614h 92
6.4.10.7 ONE_SHOT/MULTI_SHOT: 61Ch 92
7 Imaging Parameters and Control 94
7.1 Overview of Imaging Parameters 94
7.2 Brightness 95
7.2.1 BRIGHTNESS: 800h 95
7.2.2 Example: Setting Brightness Using the FlyCapture API 96
7.3 Gain 96
7.3.1 GAIN: 820h 97
7.3.2 Example: Setting Gain Using the FlyCapture API 98
7.4 Saturation 98
7.4.1 SATURATION: 814h 98
7.4.2 Example: Setting Saturation Using the FlyCapture API 99
7.5 Hue 100
7.5.1 HUE: 810h 100
7.5.2 Example: Setting Hue Using the FlyCapture API 101
7.6 Sharpness 101
7.6.1 SHARPNESS: 808h 102
7.6.2 Example: Setting Sharpness Using the FlyCapture API 103
7.7 Gamma and Lookup Table 103
7.7.1 GAMMA: 818h 105
7.7.2 Example: Setting Gamma Using the FlyCapture API 106
7.7.3 LUT: 80000h – 80048h (IIDC 1.32) 106

Copyright ©2011-2012 Point Grey Research Inc.

7.8 White Balance 109
7.8.1 WHITE_BALANCE: 80Ch 110
7.8.2 Example: Setting White Balance Using the FlyCapture API 110
7.9 Shutter 111
7.9.1 Extended Shutter Times 112
7.9.2 SHUTTER: 81Ch 112
7.9.3 Example: Setting Shutter Using the FlyCapture API 113
7.10 Auto Exposure 114
7.10.1 AUTO_EXPOSURE: 804h 114
7.10.2 AE_ROI: 1A70 – 1A74h 115
7.10.3 Example: Setting Auto Exposure Using the FlyCapture API 116
7.11 Bayer Color Processing 117
7.11.1 Accessing Raw Bayer Data 117
7.11.2 BAYER_TILE_MAPPING: 1040h 118
7.11.3 Example: Accessing Raw Bayer Data using FlyCapture2 118
7.12 Image Flip/Mirror 119
7.12.1 MIRROR_IMAGE_CTRL: 1054h 119
7.13 Embedded Image Information 119
7.13.1 FRAME_INFO: 12F8h 120
8 Troubleshooting 122
8.1 Support 122
8.2 Camera Diagnostics 123
8.2.1 INITIALIZE: 000h 123
8.2.2 TIME_FROM_INITIALIZE: 12E0h 123
8.2.3 TIME_FROM_BUS_RESET: 12E4h 123
8.2.4 XMIT_FAILURE: 12FCh 124
8.2.5 VMODE_ERROR_STATUS: 628h 124
8.2.6 CAMERA_LOG: 1D00 – 1DFFh 124
8.3 Status Indicator LED 125
8.3.1 LED_CTRL: 1A14h 125
8.4 Test Pattern 126
8.4.1 TEST_PATTERN: 104Ch 126
8.5 Blemish Pixel Artifacts 127
8.5.1 Pixel Defect Correction 127
8.5.2 PIXEL_DEFECT_CTRL: 1A60h 127
8.6 Rolling Shutter Artifacts 128
8.7 Fixed Pattern Noise Artifact 129
8.7.1 FPN_CTRL: 1A0Ch 129

Copyright ©2011-2012 Point Grey Research Inc.

Appendix A: Control and Status Registers **130**
A.1 General Register Information 130
A.1.1 Register Memory Map 130
A.1.2 Config ROM 131
A.1.2.1 Root Directory 131
A.1.2.2 Unit Directory 132
A.1.2.3 Unit Dependent Info 132
A.1.3 Calculating Base Register Addresses using 32-bit Offsets 133
A.2 Inquiry Registers 133
A.2.1 Basic Functions Inquiry Registers 133
A.2.2 Feature Presence Inquiry Registers 134
A.2.3 Feature Elements Inquiry Registers 136
A.2.4 Video Format Inquiry Registers 138
A.2.5 Video Mode Inquiry Registers 138
A.2.6 Video Frame Rate Inquiry Registers 140
A.3 Video Mode Control and Status Registers 143
A.3.1 FORMAT_7_RESIZE_INQ: 1AC8h 144
A.3.2 Inquiry Registers for Custom Video Mode Offset Addresses 144
A.3.2.1 Image Size and Position 145
A.3.2.2 COLOR_CODING_ID and COLOR_CODING_INQ 146
A.3.2.3 PACKET_PARA_INQ, BYTE_PER_PACKET, and PACKET_PER_FRAME 146
A.3.2.4 FRAME_INTERVAL_INQ 147
A.3.2.5 VALUE_SETTING 148
A.4 Absolute Value Registers 148
A.4.1 Setting Absolute Value Register Values 148
A.4.2 Absolute Value Offset Addresses 149
A.4.3 Units of Value for Absolute Value CSR Registers 150
A.4.4 Determining Absolute Value Register Values 150
Contacting Point Grey Research **152**
Revision History **153**

Copyright ©2011-2012 Point Grey Research Inc.

List of Tables

Table 1.1: Temperature Sensor Specifications 18
Table 1.2: USB 3.0 Micro-B Connector Pin Assignments 20
Table 2.1: CSR Mode Control Descriptions 26
Table 4.1: GPIO pin assignments (as shown looking at rear of camera) 41
Table 5.1: FL3-U3-13S2M Custom Formats, Modes and Frame Rates 69
Table 5.2: FL3-U3-13S2C Custom Formats, Modes and Frame Rates 70
Table 5.3: FL3-U3-13Y3M Custom Formats, Modes and Frame Rates 71
Table 5.4: FL3-U3-13E4M Custom Formats, Modes and Frame Rates 72
Table 5.5: FL3-U3-13E4C Custom Formats, Modes and Frame Rates 73
Table 5.6: FL3-U3-32S2M Custom Formats, Modes and Frame Rates 74
Table 5.7: FL3-U3-32S2C Custom Formats, Modes and Frame Rates 74
Table 5.8: FL3-U3-88S2C Custom Formats, Modes and Frame Rates 75
Table A.1: Custom Video Mode Inquiry Register Offset Addresses 145

Copyright ©2011-2012 Point Grey Research Inc.

List of Figures

Figure 1.1: FL3-U3-13S2M Quantum Efficiency 3
Figure 1.2: FL3-U3-13S2C Quantum Efficiency 4
Figure 1.3: FL3-U3-13Y3M Quantum Efficiency 5
Figure 1.4: FL3-U3-13E4M Quantum Efficiency 6
Figure 1.5: FL3-U3-13E4C Quantum Efficiency 7
Figure 1.6: FL3-U3-32S2M Quantum Efficiency 8
Figure 1.7: FL3-U3-32S2C Quantum Efficiency 9
Figure 1.8: FL3-U3-88S2C Quantum Efficiency 10
Figure 1.9: FL3-U3 Mono Models Quantum Efficiency 11
Figure 1.10: FL3-U3 Models Dynamic Range 11
Figure 1.11: Camera Dimensional Diagram 14
Figure 1.12: Tripod Adapter Dimensional Diagram 15
Figure 1.13: IR filter transmittance graph 17
Figure 1.14: USB 3.0 Micro B Connector 20
Figure 4.1: Optical input circuit 60
Figure 4.2: Optical output circuit 60
Figure 4.3: GPIO2/3 Circuit 61
Figure 5.1: 2x Vertical and 2x Horizontal Binning 63
Figure 6.1: External trigger timing characteristics 82
Figure 6.2: Relationship Between External Triggering and Video Mode Change Request 83
Figure 6.3: Trigger Mode 0 (“Standard External Trigger Mode”) 84
Figure 6.4: Trigger Mode 1 (“Bulb Shutter Mode”) 85
Figure 6.5: Trigger Mode 15 (“Multi-Shot Trigger Mode”) 86
Figure 6.6: Software trigger timing 89
Figure 7.1: Example Bayer Tile Pattern 117
Figure 8.1: Test Pattern Sample Image 126

Copyright ©2011-2012 Point Grey Research Inc.

About This Manual

This manual provides the user with a detailed specification of the Flea3 USB 3.0 camera system. The user should be aware that the camera system is complex and dynamic – if any errors or omissions are found during experimentation, please contact us. (See Contacting Point Grey Research on page 152.)

This document is subject to change without notice.



All model-specific information presented in this manual reflects functionality available in the model's firmware version.

For more information see Camera Firmware on page 39.

Where to Find Information

Chapter	What You Will Find
1. Welcome	General camera specifications and specific model specifications (page 1) Imaging Performance specifications and Quantum Efficiency graphs Camera properties, including diagrams (page 13)
2. Getting Started	Preparation for installing the camera (page 22) Installation instructions (page 24) Introduction to camera controls (page 25)
3. General Operation	Powering the camera (page 29) Device Information (page 29) User Configuration sets (page 32) On-camera frame buffer (page 35) Flash memory (page 38) Firmware (page 39)
4. Input/Output Control	GPIO Modes (page 41) Programmable Strobe Output (page 42) Pulse Width Modulation (page 50) Serial Communication (page 51) GPIO Electrical Characteristics (page 59)
5. Video Formats, Modes, and Frame Rates	Overview and descriptions of Video Modes (page 63) Supported Formats, Modes, and Frame Rates for each model (page 69) Video Format and Mode CSRs (page 76)
6. Image Acquisition and Transmission	Types of shutters: Global, Rolling, Global Reset (page 79) Asynchronous Triggering (page 81) and Supported Trigger Modes (page 84)

Copyright ©2011-2012 Point Grey Research Inc.

Chapter	What You Will Find
7. Image Parameters and Control	Brightness (page 95) Shutter (page 111) Gain (page 96) Auto Exposure (page 114) Gamma and Lookup Table (page 103) Saturation (page 98) Hue (page 100) Sharpness (page 101) White Balance (page 109) Bayer Color Processing (page 117) Image Flip/Mirror (page 119) Embedded Image Information (page 119)
8. Troubleshooting	How to get support (page 122) Status LED (page 125) Diagnostics (page 123) Test Pattern (page 126) Blemish Pixel Artifacts (page 127) Rolling Shutter Artifacts (page 128) Fixed Pattern Noise Artifacts (page 129)
Appendix	Register Reference Information (page 130)
Contacting Point Grey	How to reach Point Grey Research Inc. (page 152)

Document Conventions

This manual uses the following to provide you with additional information:



A note that contains information that is distinct from the main body of text. For example, drawing attention to a difference between models; or a reminder of a limitation.



A note that contains a warning to proceed with caution and care, or to indicate that the information is meant for an advanced user. For example, indicating that an action may void the camera's warranty.

If further information can be found in our Knowledge Base, a list of articles is provided.

Related Knowledge Base Articles

Title	Article
Title of the Article	Link to the article on the Point Grey website

If there are further resources available, a link is provided either to an external website, or to the FlyCapture2 SDK.

Related Resources

Title	Link
Title of the resource	Link to the resource

Copyright ©2011-2012 Point Grey Research Inc.

1 Welcome to Flea3 USB 3.0

The fully redesigned, next generation Flea3 camera series builds on the success of the ultra-compact Flea2 by adding new Sony image sensors to the line-up. The Flea3 also offers a host of new features, including enhanced opto-isolated GPIO; an on-camera frame buffer; non-volatile flash memory for user data storage; new trigger modes; and improved imaging performance.

1.1 Flea3 USB 3.0 Specifications

MODEL	VERSION	MP	IMAGING SENSOR
FL3-U3-13S2C-CS **FL3-U3-13S2M-CS**	Color Mono	1.3 MP	▪ Sony IMX035 CMOS, 1/3", 3.63 µm ▪ Rolling Shutter ▪ 1328x1048 at 120 FPS
FL3-U3-13Y3M-C	Mono	1.3 MP	▪ On Semi VITA1300 CMOS, 1/2", 4.8 µm ▪ Global Shutter ▪ 1280x1024 at 150 FPS
FL3-U3-13E4C-C **FL3-U3-13E4M-C**	Color Mono	1.3 MP	▪ e2v EV76C560 CMOS, 1/1.8", 5.3 µm ▪ Global Shutter ▪ 1280x1024 at 60 FPS
FL3-U3-32S2C-CS **FL3-U3-32S2M-CS**	Color Mono	3.2 MP	▪ Sony IMX036 CMOS, 1/2.8", 2.5 µm ▪ Rolling Shutter with Global Reset ▪ 2080x1552 at 60 FPS
FL3-U3-88S2C-C	Color	8.8 MP	▪ Sony IMX121 CMOS, 1/2.5", 1.55 µm ▪ Rolling Shutter with Global Reset ▪ 4096x2160 at 21 FPS

	All Flea3 USB 3.0 Models
A/D Converter	12-bit (FL3-U3-13S2, FL3-U3-32S2, FL3-U3-88S2) / 10-bit (FL3-U3-13Y3, FL3-U3-13E4)
Video Data Output	8, 12, 16 and 24-bit digital data
Image Data Formats	Y8, Y16, Mono8, Mono12, Mono16, Raw8, Raw12, Raw16 (all models); RGB, YUV411, YUV422, YUV 444 (color models)
Partial Image Modes	Pixel binning and region of interest (ROI) modes
Image Processing	Gamma, lookup table, hue, saturation, and sharpness
Gain	Automatic*/Manual/One-Push* Gain modes (*Free running only)
	0 dB to 24 dB (FL3-U3-13S2, FL3-U3-32S2, FL3-U3-88S2) / 0 db to 18 db (FL3-U3-13Y3, FL3-U3-13E4)
Gamma	0.50 to 4.00

Copyright ©2011-2012 Point Grey Research Inc.

	All Flea3 USB 3.0 Models
White Balance	Automatic/Manual modes, programmable via software
Color Processing	On-camera in YUV or RGB format, or on-PC in Raw format
Digital Interface	USB 3.0 interface with screw locks for camera control, data, and power
Transfer Rates	5 Gbit/s
GPIO	8-pin Hirose HR25 GPIO connector for power, trigger, strobe, PWM, and serial I/O: 1 opto-isolated input, 1 opto-isolated output, 2 bi-directional I/O pins
External Trigger Modes	IIDC Trigger Modes 0, 1 (excluding FL3-U3-13E4), and 15
Synchronization	via external trigger or software trigger
Shutter	Rolling Shutter (FL3-U3-13S2) / Global Reset (FL3-U3-32S2, FL3-U3-88S2) / Global Shutter (FL3-U3-13Y3, FL3-U3-13E4)
	Automatic*/Manual/One-Push*/Extended Shutter** modes (*Free running only) (**except FL3-U3-13Y3)
	0.008 ms to 1 second (FL3-U3-13S2) / 0.006 ms to 1 second (FL3-U3-13Y3) / 0.016 ms to 1 second (FL3-U3-13E4) / 0.01 ms to 32 seconds (FL3-U3-32S2) / 0.021 ms to 1 second (FL3-U3-88S2)
Image Buffer	32 MB frame buffer
Memory Channels	2 memory channels for custom camera settings
Flash Memory	1 MB
Dimensions	29 x 29 x 30 mm excluding lens holder (metal case)
Mass	Without optics: 35 g (FL3-U3-13S2, FL3-U3-32S2) / 41 g (FL3-U3-13Y3, FL3-U3-13E4, FL3-U3-88S2)
Power Consumption	5 V, <3 W, via GPIO or USB 3.0 interface
Camera Specification	IIDC v1.32
Camera Control	via FlyCapture SDK, CSRs, or third party software
Camera Updates	In-field firmware updates
Lens Mount	CS-mount (FL3-U3-13S2, FL3-U3-32S2) / C-mount (FL3-U3-13Y3, FL3-U3-13E4, FL3-U3-88S2)
Operating Temperature	0° to 45°C
Storage Temperature	-30° to 60°C
Emissions Compliance	CE, FCC, RoHS
Operating System	Windows 7 32- or 64-bit
Warranty	Two years

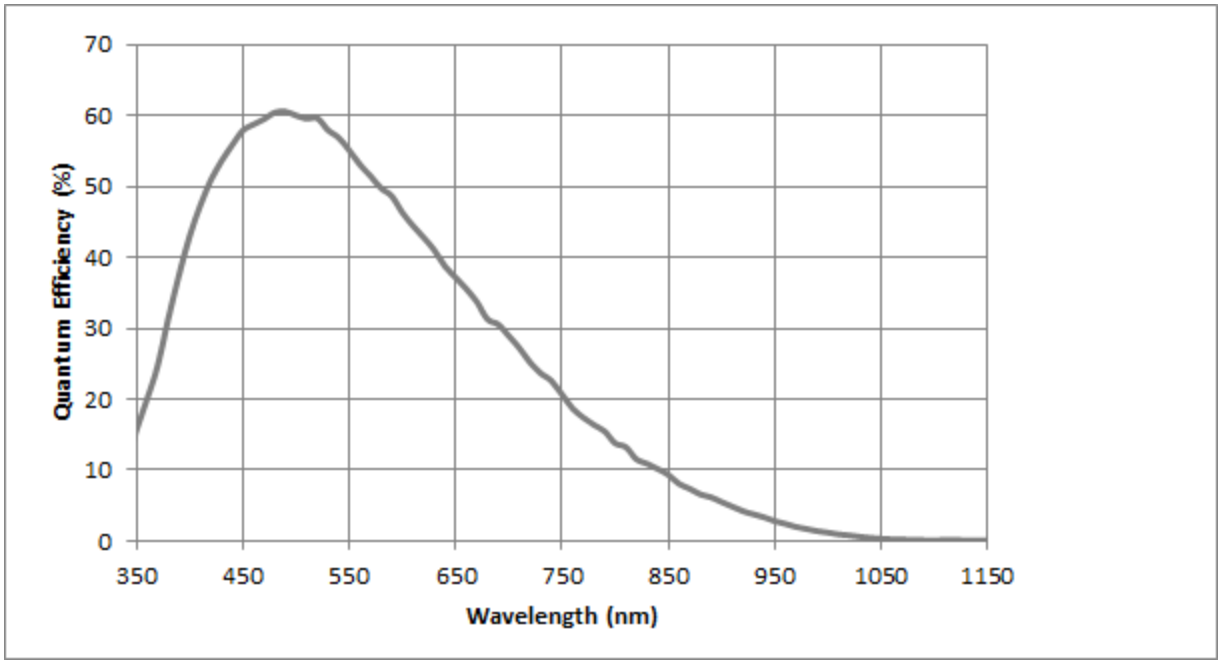
Copyright ©2011-2012 Point Grey Research Inc.

1.1.1 FL3-U3-13S2M (Mono) Imaging Performance

Specification	Mode 0
Full Well Depth	17700 e- at zero gain
Dynamic Range	65 dB
Read Noise	9.0 e- at zero gain
Measurements taken at maximum resolution	

Quantum Efficiency	
Peak QE Wavelength	490 nm
Peak QE Value	60%

Figure 1.1: FL3-U3-13S2M Quantum Efficiency



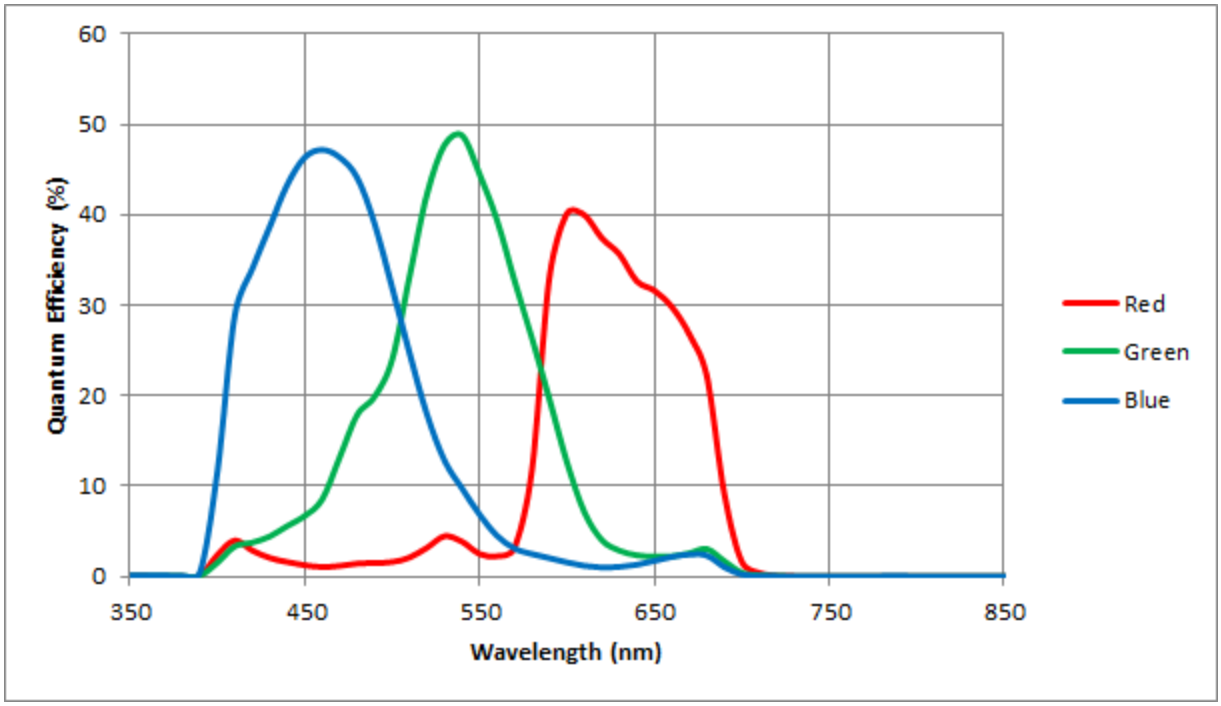
Copyright ©2011-2012 Point Grey Research Inc.

1.1.2 FL3-U3-13S2C (Color) Imaging Performance

Specification	Mode 0
Full Well Depth	17000 e- at zero gain
Dynamic Range	65 dB
Read Noise	8.5 e- at zero gain
Measurements taken at maximum resolution	

Quantum Efficiency	
Peak QE Wavelength	Red 600 nm, 540 nm, Blue 460 nm
Peak QE Value	Red 40%, Green 48%, Blue 47%

Figure 1.2: FL3-U3-13S2C Quantum Efficiency



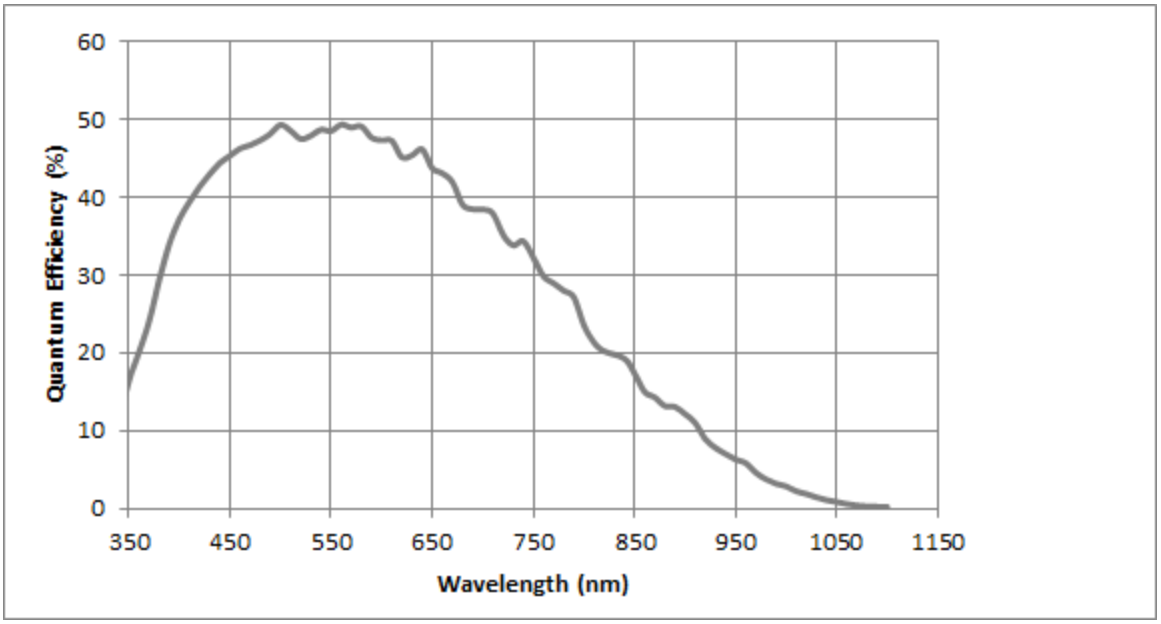
Copyright ©2011-2012 Point Grey Research Inc.

1.1.3 FL3-U3-13Y3M (Mono) Imaging Performance

Specification	Mode 0
Full Well Depth	14500 e- at zero gain
Dynamic Range	52 dB
Read Noise	33 e- at zero gain
Measurements taken at maximum resolution	

Quantum Efficiency	
Peak QE Wavelength	560 nm
Peak QE Value	49%

Figure 1.3: FL3-U3-13Y3M Quantum Efficiency



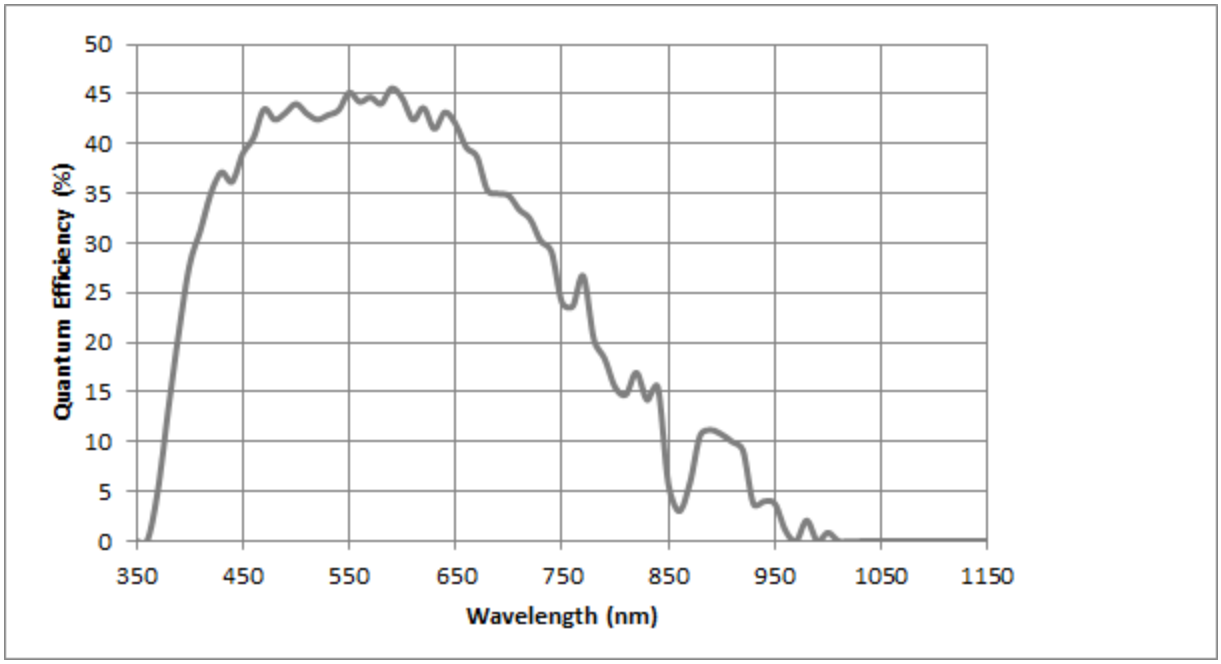
Copyright ©2011-2012 Point Grey Research Inc.

1.1.4 FL3-U3-13E4M (Mono) Imaging Performance

Specification	Mode 0
Full Well Depth	15600 e- at zero gain
Dynamic Range	54 dB
Read Noise	31.6 e- at zero gain
Measurements taken at maximum resolution	

Quantum Efficiency	
Peak QE Wavelength	570 nm
Peak QE Value	45%

Figure 1.4: FL3-U3-13E4M Quantum Efficiency



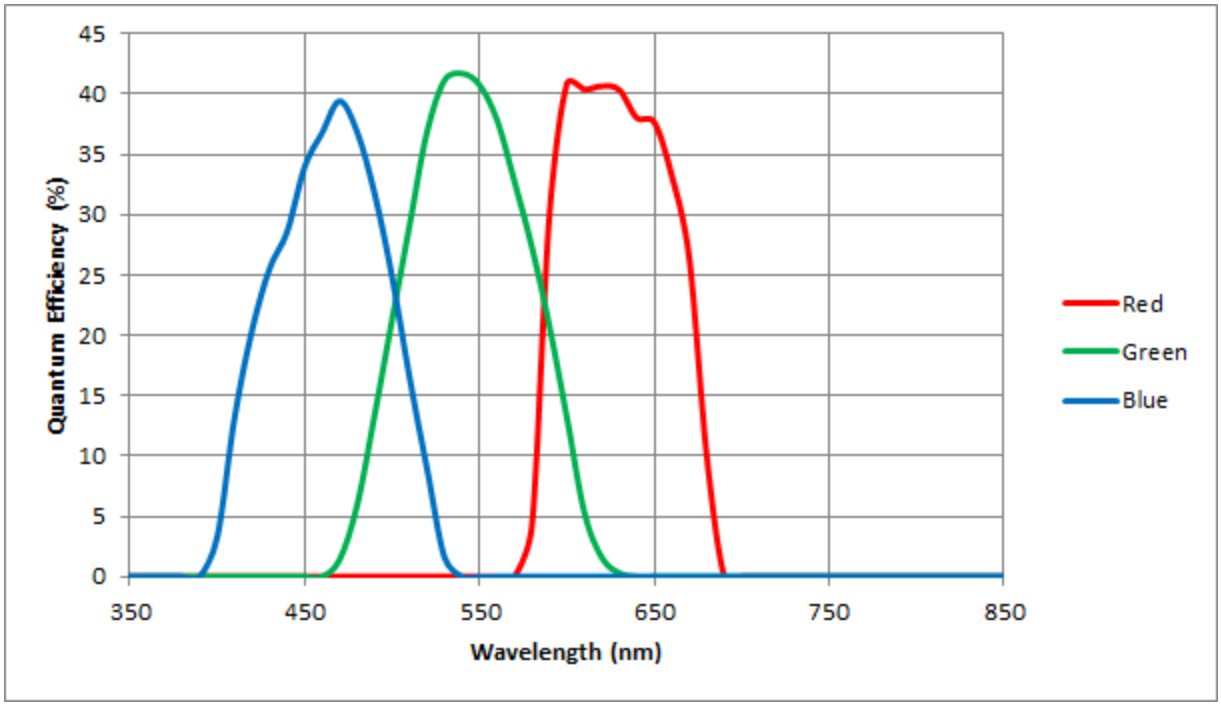
Copyright ©2011-2012 Point Grey Research Inc.

1.1.5 FL3-U3-13E4C (Color) Imaging Performance

Specification	Mode 0
Full Well Depth	14500 e- at zero gain
Dynamic Range	54 dB
Read Noise	29.6 e- at zero gain
Measurements taken at maximum resolution	

Quantum Efficiency	
Peak QE Wavelength	Red 600 nm, Green 540 nm, Blue 470 nm
Peak QE Value	Red 41%, Green 42%, Blue 39%

Figure 1.5: FL3-U3-13E4C Quantum Efficiency



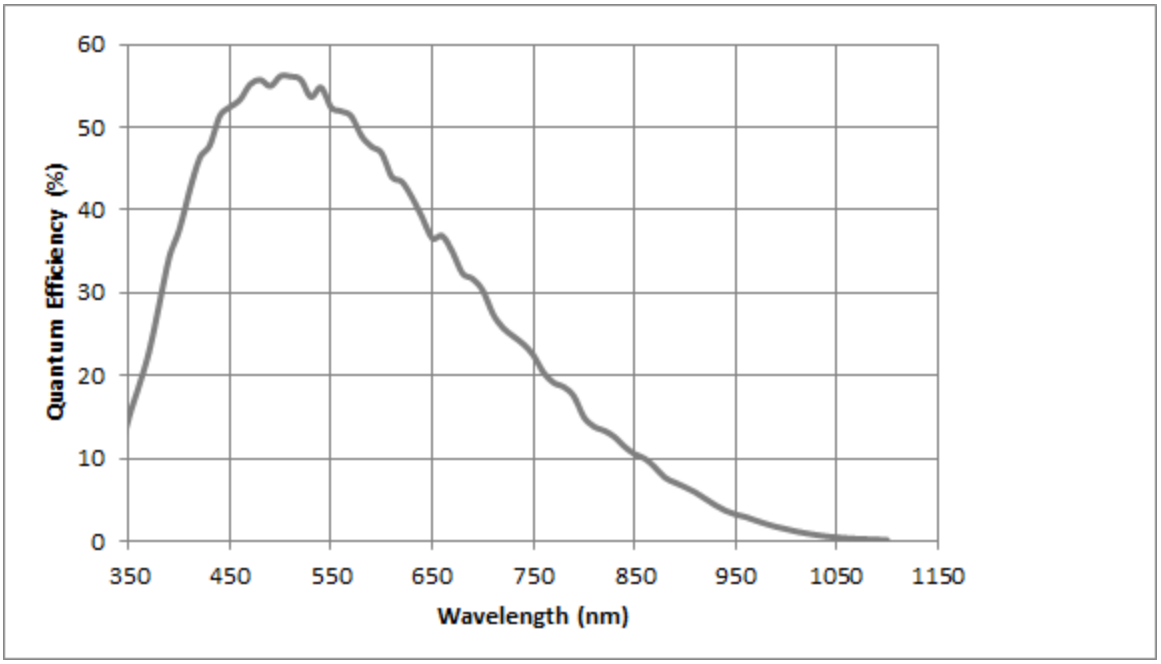
Copyright ©2011-2012 Point Grey Research Inc.

1.1.6 FL3-U3-32S2M (Mono) Imaging Performance

Specification	Mode 0
Full Well Depth	15200 e- at zero gain
Dynamic Range	61 dB
Read Noise	9.2 e- at zero gain
Measurements taken at maximum resolution	

Quantum Efficiency	
Peak QE Wavelength	510 nm
Peak QE Value	56%

Figure 1.6: FL3-U3-32S2M Quantum Efficiency



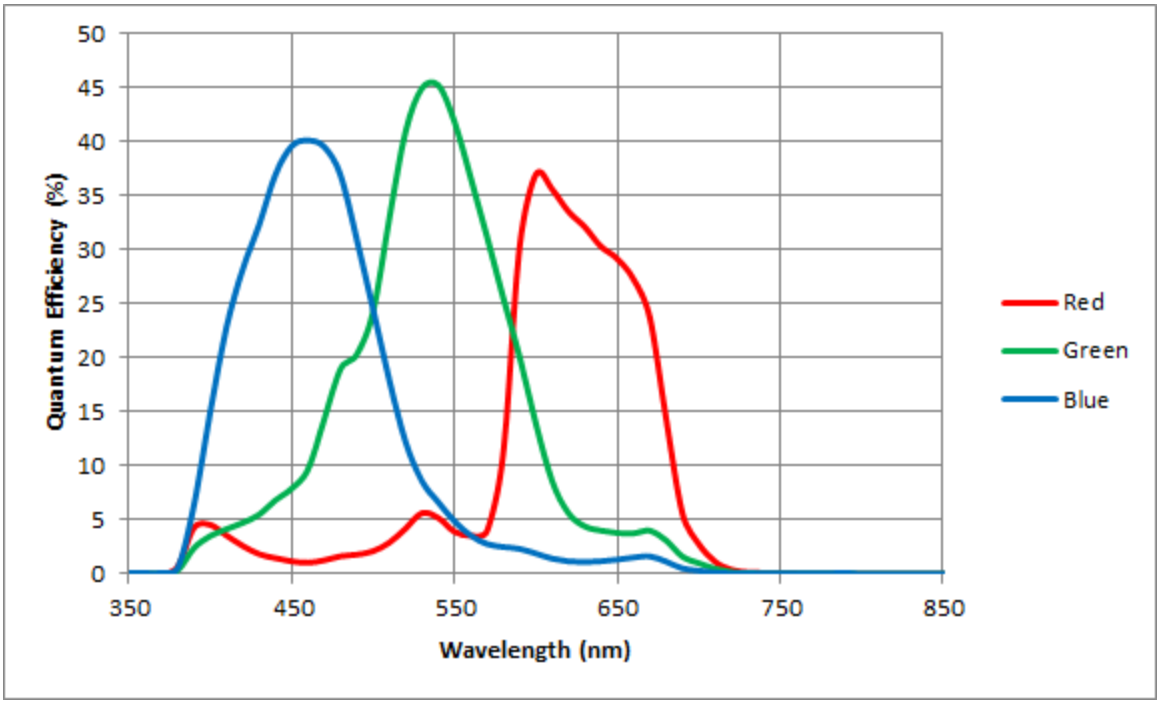
Copyright ©2011-2012 Point Grey Research Inc.

1.1.7 FL3-U3-32S2C (Color) Imaging Performance

Specification	Mode 0
Full Well Depth	14300 e- at zero gain
Dynamic Range	60 dB
Read Noise	9.4 e- at zero gain
Measurements taken at maximum resolution	

Quantum Efficiency	
Peak QE Wavelength	Red 600 nm, Green 530 nm, Blue 460 nm
Peak QE Value	Red 37%, Green 45%, Blue 40%

Figure 1.7: FL3-U3-32S2C Quantum Efficiency



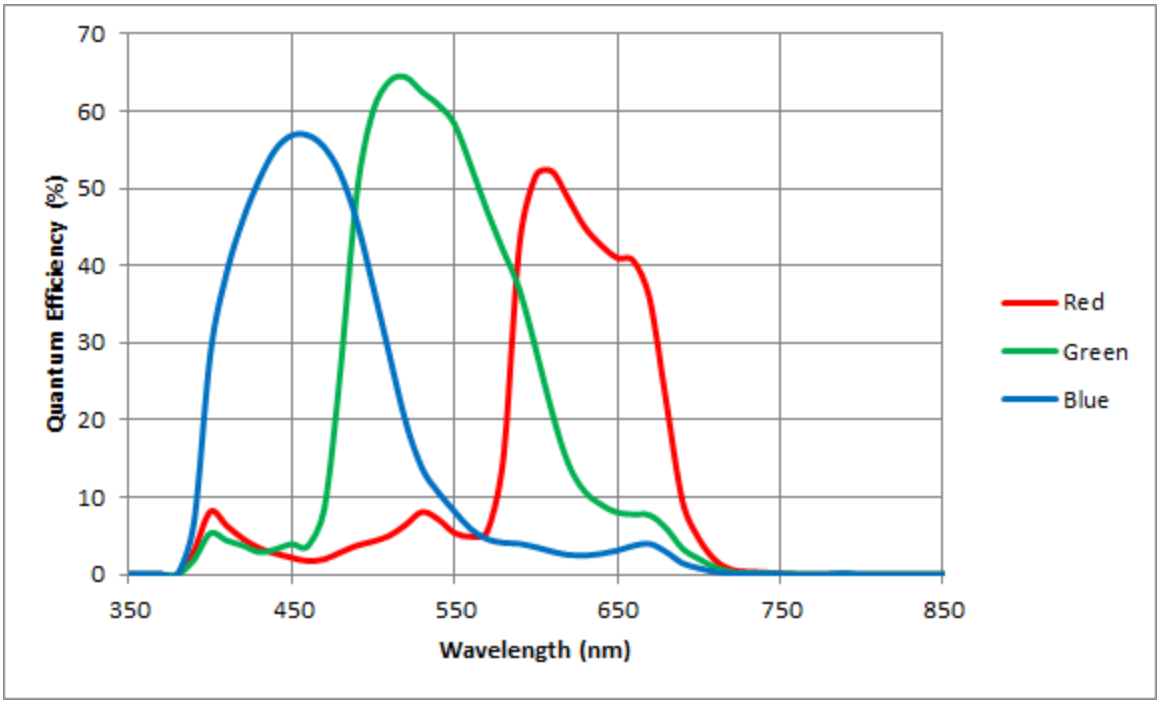
Copyright ©2011-2012 Point Grey Research Inc.

1.1.8 FL3-U3-88S2C (Color) Imaging Performance

Specification	Mode 0
Full Well Depth	7600 e- at zero gain
Dynamic Range	68 dB
Read Noise	3.0 e- at zero gain
Measurements taken at maximum resolution	

Quantum Efficiency	
Peak QE Wavelength	Red 609 nm, Green 519 nm, Blue 459 nm
Peak QE Value	Red 52%, Green 64%, Blue 56%

Figure 1.8: FL3-U3-88S2C Quantum Efficiency



Copyright ©2011-2012 Point Grey Research Inc.

1.1.9 Flea3 USB 3.0 Camera Comparison

Figure 1.9: FL3-U3 Mono Models Quantum Efficiency

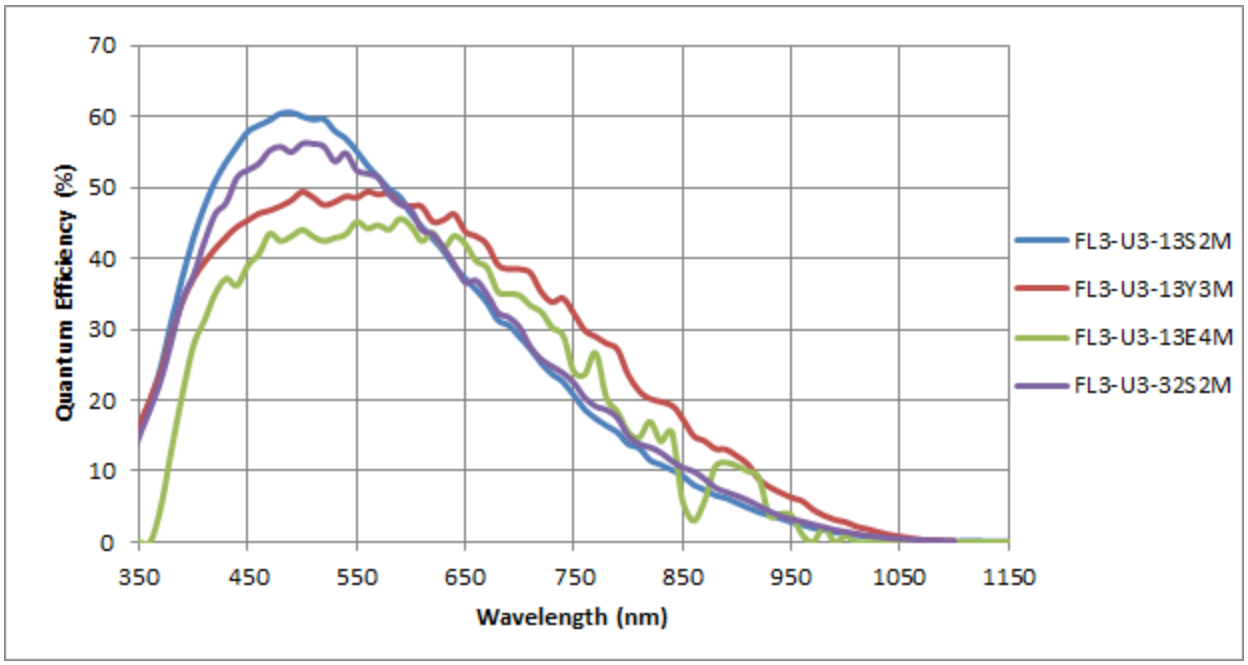
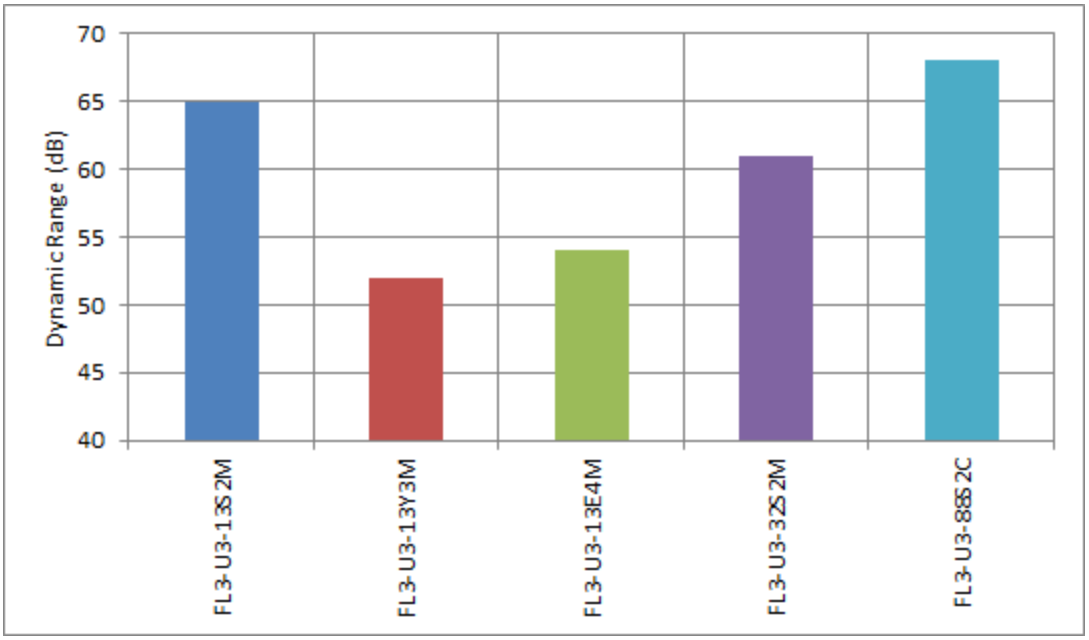


Figure 1.10: FL3-U3 Models Dynamic Range



Copyright ©2011-2012 Point Grey Research Inc.

1.2 Analog-to-Digital Conversion

All CMOS camera sensors incorporates an on-chip analog to digital converter. The bit depth of the output varies between sensors and can be seen in the table below. Image data is left-aligned across a 2-byte format. The least significant bits, which are the unused bits, are always zero.

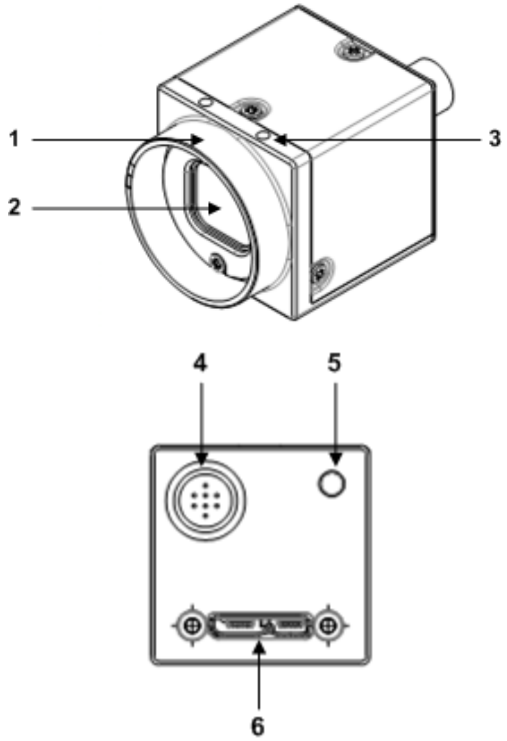
For example, for a 12 bit output, the least significant 4 bits will be zeros in order to fill 2 bytes. E.g. 0xFFF0.

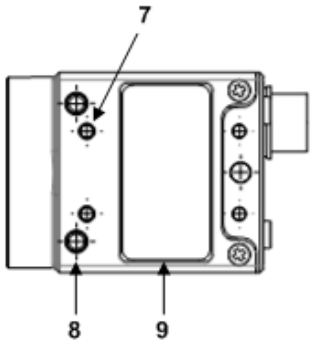
Model	Bit Depth	Possible Values
FL3-U3-13S2	12	4096
FL3-U3-13Y3	10	1024
FL3-U3-13E4	10	1024
FL3-U3-32S2	12	4096
FL3-U3-88S2	12	4096

Copyright ©2011-2012 Point Grey Research Inc.

1.3 Flea3 USB 3.0 Mechanical Properties

1.3.1 Physical Description





1. **Lens holder**
   Attach lens or other optical equipment. See Lens Mounting on page 15

2. **Glass/IR filter system**
   See Dust Protection on page 16 and Infrared Cut-Off Filters on page 17

3. **M2x2 mounting holes**
   See Mounting with the Case or Mounting Bracket on page 16

4. **General purpose I/O connector**
   The 8-pin GPIO connector is used for external triggering, strobe output or digital I/O. See General Purpose Input/Output (GPIO) on page 41

5. **Status LED**
   This light indicates the current state of the camera operation. See Status Indicator LED on page 125

6. **USB3 connector**
   See USB 3.0 Connector on page 20

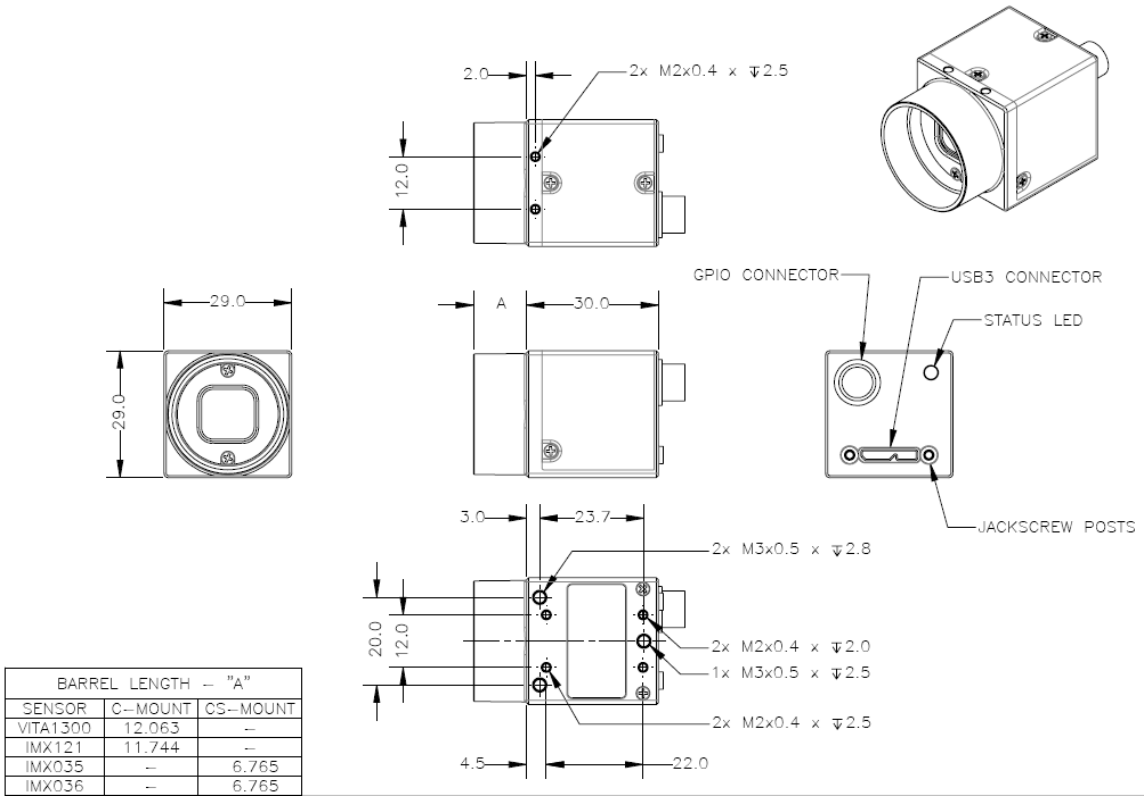
7. **M2x2 mounting holes**
8. **M3x2.5 mounting holes**
   See Mounting with the Case or Mounting Bracket on page 16

9. **Camera label**
   Contains camera information such as model name, serial number and required compliance information.

Copyright ©2011-2012 Point Grey Research Inc.

1.3.2 Camera Dimensions

To obtain 3D models, contact support@ptgrey.com.



BARREL LENGTH ← "A"		
SENSOR	C-MOUNT	CS-MOUNT
VITA1300	12.063	–
IMX121	11.744	–
IMX035	–	6.765
IMX036	–	6.765

Figure 1.11: Camera Dimensional Diagram

Copyright ©2011-2012 Point Grey Research Inc.

1.3.3 Tripod Adapter Dimensions

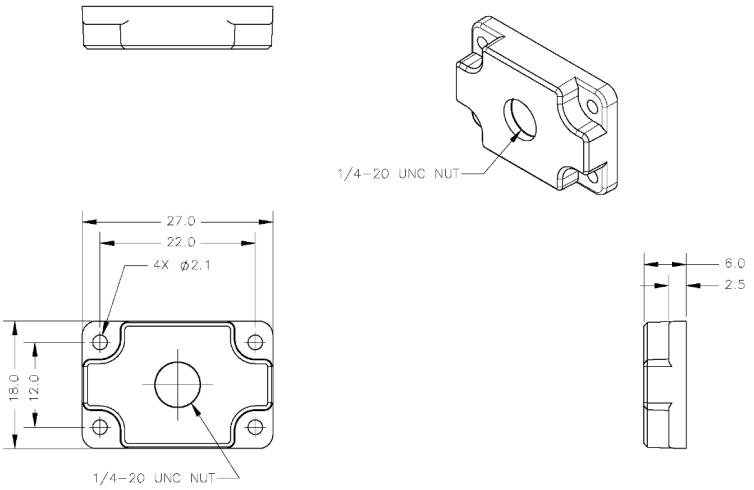


Figure 1.12: Tripod Adapter Dimensional Diagram

1.3.4 Lens Mounting

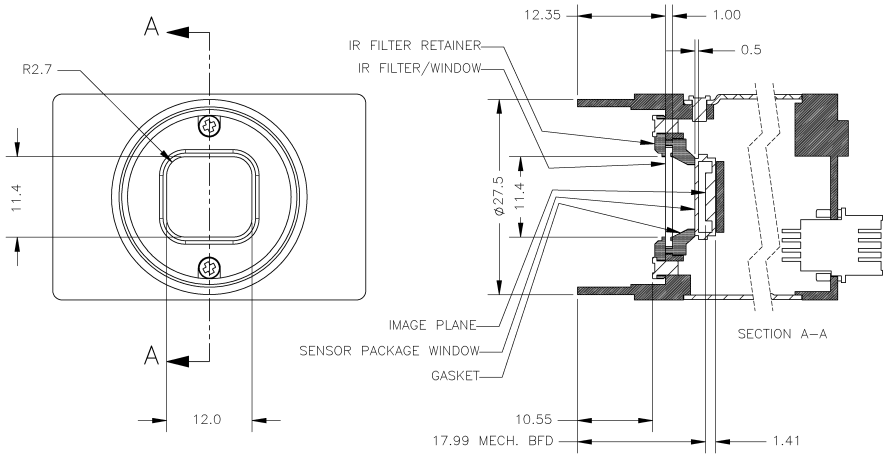
Lenses are not included with individual cameras.

Related Knowledge Base Articles

Title	Article
Selecting a lens for your camera	Knowledge Base Article 345

The FL3-U3-13S2 and FL3-U3-32S2 lens mount is compatible with CS-mount lenses. A 5 mm C-mount adapter is included.

The FL3-U3-13Y3, FL3-U3-13E4, and FL3-U3-88S2 lens mount is compatible with C-mount lenses. Correct focus cannot be achieved using a CS-mount lens on a C-mount camera.



Copyright ©2011-2012 Point Grey Research Inc.

1.3.4.1 Back Flange Distance

The Back Flange Distance (BFD) is offset due to the presence of both a 1 mm infrared cutoff (IRC) filter and a 0.5 mm sensor package window. These two pieces of glass fit between the lens and the sensor image plane. The IRC filter is installed on color cameras. In monochrome cameras, it is a transparent piece of glass. The sensor package window is installed by the sensor manufacturer. Both components cause refraction, which requires some offset in flange back distance to correct.

For more information about the IRC filter, see Infrared Cut-Off Filters on next page.

1.3.5 Dust Protection

The camera housing is designed to prevent dust from falling directly onto the sensor's protective glass surface. This is achieved by placing a piece of clear glass (monochrome camera models) or an IR cut-off filter (color models) that sits above the surface of the sensor's glass. A removable plastic retainer keeps this glass/filter system in place. By increasing the distance between the imaging surface and the location of the potential dust particles, the likelihood of interference from the dust (assuming non-collimated light) and the possibility of damage to the sensor during cleaning is reduced.



- *Cameras are sealed when they are shipped. To avoid contamination, seals should not be broken until cameras are ready for assembly at customer's site.*
- *Use caution when removing the protective glass or filter. Damage to any component of the optical path voids the Hardware Warranty.*
- *Removing the protective glass or filter alters the optical path of the camera, and may result in problems obtaining proper focus with your lens.*

Related Knowledge Base Articles

Title	Article
Removing the IR filter from a color camera	Knowledge Base Article 215
Selecting a lens for your camera	Knowledge Base Article 345

1.3.6 Mounting with the Case or Mounting Bracket

Using the Case

The case is equipped with the following mounting holes:

- Two (2) M2 x 2mm mounting holes on the top of the case
- Three (3) M3 x 2.5mm mounting holes on the bottom of the case
- Four (4) M2 x 2mm mounting holes on the bottom of the case that can be used to attach the camera directly to a custom mount or to the tripod mounting bracket

Using the Mounting Bracket

The tripod mounting bracket is equipped with two (2) M3 and one (1) M2 mounting holes.

Copyright ©2011-2012 Point Grey Research Inc.

1.3.7 Infrared Cut-Off Filters

Point Grey color camera models are equipped with an additional infrared (IR) cut-off filter. This filter can reduce sensitivity in the near infrared spectrum and help prevent smearing. The properties of this filter are illustrated in the results below.

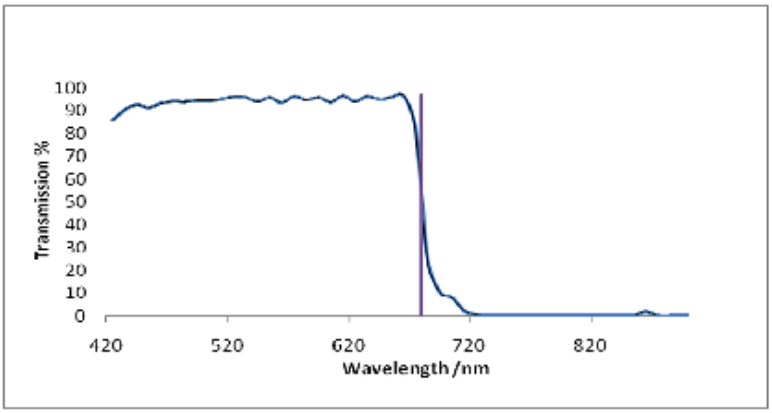


Figure 1.13: IR filter transmittance graph

In monochrome models, the IR filter is replaced with a transparent piece of glass.

The following are the properties of the IR filter/protective glass:

Type	Reflective
Material	Schott D 263 T
Physical Filter Size	14 mm x 14 mm
Glass Thickness	1.0 mm
Dimensional Tolerance	+/-0.1 mm
Coating Filters	Scott D 263 T

For more information, see Dust Protection on previous page.

Related Knowledge Base Articles

Title	Article
Removing the IR filter from a color camera	Knowledge Base Article 215

Copyright ©2011-2012 Point Grey Research Inc.

1.4 Handling Precautions and Camera Care



Do not open the camera housing. Doing so voids the Hardware Warranty described at the beginning of this manual.

Your Point Grey digital camera is a precisely manufactured device and should be handled with care. Here are some tips on how to care for the device.

- Avoid electrostatic charging.
- When handling the camera unit, avoid touching the lenses. Fingerprints will affect the quality of the image produced by the device.
- To clean the lenses, use a standard camera lens cleaning kit or a clean dry cotton cloth. Do not apply excessive force.
- Extended exposure to bright sunlight, rain, dusty environments, etc. may cause problems with the electronics and the optics of the system.
- Avoid excessive shaking, dropping or any kind of mishandling of the device.

Related Knowledge Base Articles

Title	Article
Solving problems with static electricity	Knowledge Base Article 42
Cleaning the imaging surface of your camera	Knowledge Base Article 66

1.4.1 Case Temperature and Heat Dissipation

You must provide sufficient heat dissipation to control the internal operating temperature of the camera.

The camera is equipped with an on-board temperature sensor. It allows you to obtain the temperature of the camera board-level components. The sensor measures the ambient temperature within the case. This feature can be accessed using the TEMPERATURE register 82Ch (page 32).

Table 1.1: Temperature Sensor Specifications

Accuracy	0.5°C
Range	-25°C to +85°C
Resolution	12 bits



As a result of packing the camera electronics into a small space, the outer case of the camera can become very warm to the touch when running in some high data rate video modes. This is expected behavior and will not damage the camera electronics.

Copyright ©2011-2012 Point Grey Research Inc.

To reduce heat, use a cooling fan to set up a positive air flow around the camera, taking into consideration the following precautions:

- Mount the camera on a heat sink, such as a camera mounting bracket, made out of a heat-conductive material like aluminum.
- Make sure the flow of heat from the camera case to the bracket is not blocked by a non-conductive material like plastic.
- Make sure the camera has enough open space around it to facilitate the free flow of air.

Copyright ©2011-2012 Point Grey Research Inc.

1.5 Camera Interface and Connectors

1.5.1 USB 3.0 Connector

The camera is equipped with a USB 3.0 Micro-B connector that is used for data transmission, camera control and power. For more detailed information, consult the USB 3.0 specification available from http://www.usb.org/developers/docs/.



Figure 1.14: USB 3.0 Micro B Connector

Table 1.2: USB 3.0 Micro-B Connector Pin Assignments

Pin	Signal Name	Description
1	VBUS	Power
2	D-	USB 2.0 differential pair
3	D+	
4	ID	OTG identification
5	GND	Ground for power return
6	MicB_SSTX-	SuperSpeed transmitter differential pair
7	MicB_SSTX+	
8	GND_DRAIN	Ground for SuperSpeed signal return
9	MicB_SSRX-	SuperSpeed receiver differential pair
10	MicB_SSRX+	

The USB 3.0 Micro-B receptacle accepts a USB 2.0 Micro-B plug and, therefore, the camera is backward compatible with the USB 2.0 interface.

When the camera is connected to a USB 2.0 interface, it runs at USB 2.0 speed, and maximum frame rates are adjusted accordingly based on current imaging parameters.

Related Knowledge Base Articles

Title	Article
USB 3.0 Frequently Asked Questions	Knowledge Base Article 357

1.5.2 Interface Card

The camera must connect to an interface card. This is sometimes called a host adapter, a bus controller, or a network interface card (NIC).

Copyright ©2011-2012 Point Grey Research Inc.

In order to achieve the maximum benefits of USB 3.0, the camera must connect to a USB 3.0 PCIe 2.0 card.

To purchase a compatible card from Point Grey, visit the Point Grey Webstore or the Products Accessories page.

1.5.3 Interface Cables

The USB 3.0 standard does not specify a maximum cable length.

To purchase a recommended cable from Point Grey, visit the Point Grey Webstore or the Products Accessories page.

1.5.4 General Purpose Input/Output (GPIO)

The camera has an 8-pin GPIO connector on the back of the case; refer to the diagram below for wire color-coding. The connector is a Hirose HR25 8 pin connector (Mfg P/N: HR25-7TR-8SA). Male connectors (Mfg P/N: HR25-7TP-8P) can be purchased from Digikey (P/N: HR702-ND).

Diagram	Pin	Function	Description
	1	I0	Opto-isolated input (default Trigger in)
	2	O1	Opto-isolated output
	3	IO2	Input/Output/serial transmit (TX)
	4	IO3	Input/Output/serial receive (RX)
	5	GND	Ground for bi-directional IO, V_{EXT}, +3.3 V pins
	6	OPTO_GND	Ground for opto-isolated IO pins
	7	V_{EXT}	Allows the camera to be powered externally
	8	+3.3 V	Power external circuitry up to 150 mA

Point Grey sells a 12 V wall-mount power supply equipped with a HR25 8-pin GPIO wiring harness for connecting to the camera (**Part No. ACC-01-9006**). For more information, see the miscellaneous product accessories page on the Point Grey website.

For more information on camera power, see Powering the Camera on page 29

For more information on configuring input/output with GPIO, see Input/Output Control on page 41.

For details on GPIO circuits, see GPIO Electrical Characteristics on page 59.

Copyright ©2011-2012 Point Grey Research Inc.

2 Getting Started with Flea3 USB 3.0

2.1 Before You Install

2.1.1 Will your system configuration support the camera?

Recommended System Configuration

Operating System	CPU	RAM	Video	Ports	Software
Windows 7 32- or 64-bit	Intel Core i3 3.1 GHz or equivalent	2 GB	128 MB RAM	PCIe 2.0 compatible host controller with USB 3.0 connector	Microsoft Visual Studio 2005 SP1 and SP1 Update (to compile and run example code)



Refer to Knowledge Base Article 368 for important information on recommended and unsupported USB 3.0 system components.

2.1.2 Do you have all the parts you need?

To install your camera you will need the following components:

- USB 3.0 cable (on page 21)
- 8-pin GPIO connector (on page 41)
- CS-mount (or C-mount with adaptor)/C-mount (FL3-U3-13Y3) Lens (on page 15)
- Interface card (on page 20)

Point Grey sells a number of the additional parts required for installation. To purchase, visit the Point Grey Webstore or the Products Accessories page.

2.1.3 Do you have a downloads account?

The Point Grey downloads page has many resources to help you operate your camera effectively, including:

- Software, including Drivers (required for installation)
- Firmware updates and release notes
- Dimensional drawings and CAD models
- Documentation

To access the downloads resources you must have a downloads account.

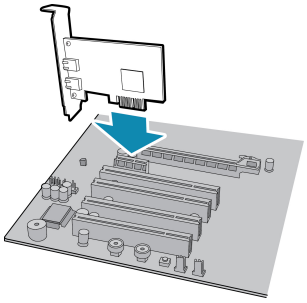
1. Go to the Point Grey downloads page.
2. Under **Register (New Users)**, complete the form, then click **Submit**.

After you submit your registration, you will receive an email with instructions on how to activate your account.

Copyright ©2011-2012 Point Grey Research Inc.

2.2 Installing Your Interface Card and Software

1. Install your Interface Card



Ensure the card is installed per the manufacturer's instructions.

Alternatively, use your PC's built-in host controller, if equipped.

Open the Windows Device Manager. Ensure the card is properly installed under **Universal Serial Bus Controllers**. An exclamation point (!) next to the card indicates the driver has not yet been installed.

2. Install the FlyCapture® Software

For existing users who already have FlyCapture installed, we recommend ensuring you have the latest version for optimal performance of your camera. If you do not need to install FlyCapture, use the DriverControlGUI to install and enable drivers for your card.

a. Login to the Point Grey downloads page.

b. Select your **Camera** and **Operating System** from the drop-down lists and click the **Search** button.

c. Click on the **Software** search results to expand the list.

d. Under **FlyCapture v2x**, click the appropriate link to begin the download and installation.

After the download is complete, the FlyCapture setup wizard begins. If the wizard does not start automatically, double-click the .exe file to open it. Follow the steps in each setup dialog.

3. Enable the Drivers for the card

During the FlyCapture installation, you are prompted to select your interface driver.

In the **Interface Driver Selection** dialog, select the **I will use USB cameras**.

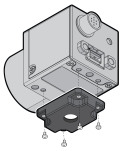
For optimal performance, after setup, we recommend configuring the pgrxhci (UsbPro) driver on the host controller to operate directly with the camera.

To uninstall or reconfigure the driver at any time after setup is complete, use the DriverControlGUI (page 27).

Copyright ©2011-2012 Point Grey Research Inc.

2.3 Installing Your Camera

1. Install the Tripod Mounting Bracket



The ASA and ISO-compliant tripod mounting bracket attaches to the camera using the included metal screws.



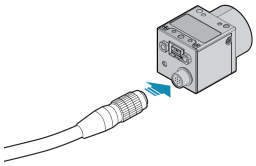
Cameras with metal cases should use metal screws; cameras with plastic cases should use plastic screws. Using improper screws may cause damage to the camera.

2. Attach a Lens

For FL3-U3-13S2/FL3-U3-32S2: Unscrew the dust cap from the CS-mount lens holder to install a lens. Note: the camera can be used with a removable 5 mm C- mount adapter.

For FL3-U3-13Y3: Unscrew the dust cap from the C-mount lens holder to install a lens.

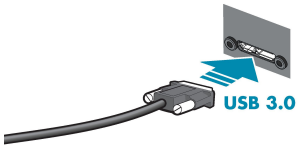
3. Plug in the GPIO connector



GPIO can be used for power, trigger, pulse width modulation, serial input output, and strobe.

The wiring harness must be compatible with a Hirose HR25 8-pin female GPIO connector.

4. Connect the interface Card and Cable to the Camera



Plug the interface cable into the host controller card and the camera. The cable jack screws can be used for a secure connection.

5. Confirm Successful Installation

Check Device Manager to confirm that installation was successful.

a. Go to the **Start menu**, select **Run**, and enter **devmgmt.msc**.
Verify the camera is listed under "**Point Grey Research Devices**."

b. Run the FlyCap2 program: **Start-> Point Grey Research->FlyCapture2-> FlyCap2**
The FlyCap2 program can be used to test the camera's image acquisition capabilities.

Changes to your camera's installation configuration can be made using utilities available in the FlyCapture2 SDK (see Configuring Camera Setup on page 27).

Copyright ©2011-2012 Point Grey Research Inc.

2.4 Controlling the Camera

The camera's features can be accessed using various controls, including:

- FlyCapture2 SDK including API examples and the FlyCap program
- Control and Status Registers

Examples of the controls are provided throughout this document. Additional information can be found in the appendices.

2.4.1 Using FlyCapture

The user can monitor or control features of the camera through FlyCapture API examples provided in the FlyCapture SDK, or through the FlyCap2 Program.

FlyCap2 Program

The FlyCap2 application is a generic, easy-to-use streaming image viewer included with the FlyCapture2 SDK that can be used to test many of the capabilities of your compatible Point Grey camera. It allows you to view a live video stream from the camera, save individual images, adjust the various video formats, frame rates, properties and settings of the camera, and access camera registers directly. Consult the FlyCapture SDK Help for more information.

Custom Applications Built with the FlyCapture API

The FlyCapture SDK includes a full Application Programming Interface that allows customers to create custom applications to control Point Grey Imaging Products. Included with the SDK are a number of source code examples to help programmers get started.

FlyCapture API examples are provided for C, C++, C#, and VB.NET languages. There are also a number of precompiled examples.

2.4.2 Using Control and Status Registers

The user can monitor or control each feature of the camera through the control and status registers (CSRs) programmed into the camera firmware. These registers conform to the IIDC v1.32 standard (except where noted). *Format* tables for each 32-bit register are presented to describe the purpose of each bit that comprises the register. Bit 0 is always the most significant bit of the register value.

Register offsets and values are generally referred to in their hexadecimal forms, represented by either a '0x' before the number or 'h' after the number, e.g. the decimal number 255 can be represented as 0xFF or FFh.

The controllable fields of most registers are *Mode* and *Value*.

2.4.2.1 Modes

Each CSR has three bits for mode control, ON_OFF, One_Push and A_M_Mode (Auto/Manual mode). Each feature can have four states corresponding to the combination of mode control bits.

Copyright ©2011-2012 Point Grey Research Inc.



Not all features implement all modes.

Table 2.1: CSR Mode Control Descriptions

One_Push	ON_OFF	A_M_Mode	State
N/A	0	N/A	**Off state**. Feature will be fixed value state and uncontrollable.
N/A	1	1	**Auto control state**. Camera controls feature by itself continuously.
0	1	0	**Manual control state**. User can control feature by writing value to the value field.
1 (Self clear)	1	0	**One-Push action**. Camera controls feature by itself only once and returns to the Manual control state with adjusted value.

2.4.2.2 Values

If the *Presence_Inq* bit of the register is one, the *value* field is valid and can be used for controlling the feature. The user can write control values to the *value* field only in the **Manual control state**. In the other states, the user can only read the *value*. The camera always has to show the real setting value at the *value* field if *Presence_Inq* is one.

2.4.2.3 Using the Inquiry Registers

The camera provides a series of inquiry registers, which allow you to reference basic information about camera features. For information about the following inquiry registers, see:

- *Inquiry Registers for Basic Functions and Feature Presence* (page 133): To determine if a particular function or feature is available on the camera.
- *Inquiry Registers for Feature Elements* (page 136): To determine if elements of a particular feature are available on the camera.
- *Video Format, Mode and Frame Rate Inquiry Registers* (page 138): To determine which standard video format, modes and frame rates are available on the camera.

The following additional inquiry registers are also available:

- *Inquiry Registers for Custom Video Modes* (page 144)
- *Inquiry Registers for Strobe Output* (page 47)
- *Inquiry Registers for Serial I/O* (page 55)
- *Inquiry Registers for Lookup Table Functionality* (page 106)

2.4.2.4 Using the Absolute Value Registers

Many Point Grey cameras implement “absolute” modes for various camera settings that report real-world values, such as shutter time in seconds (s) and gain value in decibels (dB). Using these absolute values is easier and more efficient than applying complex conversion formulas to the information in the *Value* field of the associated Control and Status Register. A relative value does not always translate to the same absolute value. Two properties that can affect this relationship are pixel clock frequency and horizontal line frequency. These properties are, in turn, affected

Copyright ©2011-2012 Point Grey Research Inc.

by such properties as resolution, frame rate, region of interest (ROI) size and position, and packet size. Additionally, conversion formulas can change between firmware versions. Point Grey therefore recommends using absolute value registers, where possible, to determine camera values.

For more information, see Absolute Value Registers on page 148.

2.5 Configuring Camera Setup

After successful installation of your camera and interface card, you can make changes to the setup. Use the tools described below to change the driver for your interface card.

For information on updating your camera's firmware post installation, see Camera Firmware on page 39.

2.5.1 Configuring Camera Drivers

Point Grey has created its own Extensible Host Controller Interface (xHCI) driver that is compatible with several USB 3.0 host controller chipsets. The PGRxHCI driver offers the best compatibility between the camera and host controller; Point Grey recommends using this driver when using Point Grey USB 3.0 cameras.

Point Grey's PGRxHCI driver does not support USB devices from other manufacturers.

Related Knowledge Base Articles

Title	Article
Recommended USB 3.0 System Components	Knowledge Base Article 368
How does my USB 3.0 camera appear in Device Manager?	Knowledge Base Article 370

To manage and update drivers use the DriverControlGUI utility provided in the SDK. To open the DriverControlGUI:

Start Menu-->All Programs-->Point Grey Research-->FlyCapture2-->Utilities-->DriverControlGUI

Select the interface from the tabs in the top left. Then select your interface card to see the current setup.

For more information about using the DriverControlGUI, see the online help provided in the tool.

2.5.2 Maximum Number of Cameras on a Single Bus

A single USB port generally constitutes a single 'bus.' The USB 3.0 standard allows for multiple devices to be connected to a single bus. The number of cameras is limited by the following considerations:

- Adequate power supply. The camera requires a nominal 5 volts (V) to operate effectively. While a standard, non-powered bus provides 500 milliamps (mA) of current at 5V, an internal, bus-powered hub provides only 400 mA. Externally-powered hubs provide 500 mA per port.
- Adequate bandwidth. The effective bandwidth available via the USB 3.0 bulk transfer method is 384 MB per second. However, many USB 3.0 interface cards currently available are built on PCIe 1.0 architecture, and cannot exceed 180 MB per second. In contrast, the PCIe 2.0 interface can transfer just under 400 MB per second. Regardless of PCIe interface, bandwidth must be shared on the system, depending on the operating configuration of the cameras (resolution, frame rate, and pixel format).

Copyright ©2011-2012 Point Grey Research Inc.

Related Knowledge Base Articles

Title	Article
Setting up multiple USB 3.0 cameras	Knowledge Base Article 389

Copyright ©2011-2012 Point Grey Research Inc.

3 General Camera Operation

3.1 Powering the Camera

The USB 3.0 Micro-B connector (page 20) provides a power connection between the camera and the host computer. The ideal input voltage is nominal 5 V DC.

The power consumption specification is: 5 V, <3 W, via GPIO or USB 3.0 interface.

Power can also be provided through the GPIO interface. For more information, see General Purpose Input/Output (GPIO) on page 41. The camera selects whichever power source is supplying a higher voltage.

Point Grey sells a 12 V wall-mount power supply equipped with a HR25 8-pin GPIO wiring harness for connecting to the camera (**Part No. ACC-01-9006**). For more information, see the miscellaneous product accessories page on the Point Grey website.

The camera does not transmit images for the first 100 ms after power-up. The auto-exposure and auto-white balance algorithms do not run while the camera is powered down. It may therefore take several (n) images to get a satisfactory image, where n is undefined.

When the camera is power cycled (power disengaged then re-engaged), the camera will revert to its default factory settings, or if applicable, the last saved memory channel. For more information, see User Memory Channels on page 32.

3.1.1 CAMERA_POWER: 610h

Format:

Field	Bit	Description
Cam_Pwr_Ctrl	[0]	Read: 0: Camera is powered down, or in the process of powering up (i.e., bit will be zero until camera completely powered up), 1: Camera is powered up Write: 0: Begin power-down process, 1: Begin power-up process
	[1-30]	Reserved
Camera_Power_Status	[31]	Read only Read: the pending value of Cam_Pwr_Ctrl

3.2 Device Information

Information about the camera 's hardware, status and monitoring is available.

Serial Number—This specifies the unique serial number of the camera.

Copyright ©2011-2012 Point Grey Research Inc.

Main Board Information—This specifies the type of camera (according to the main printed circuit board).

Sensor Board Information—This specifies the type of imaging sensor used by the camera.

Voltage—This allows the user to access and monitor the input as well as several of the internal voltages of the cameras.

Current—This allows the user to access and monitor the current consumption of the camera.

Temperature—Allows the user to get the temperature of the camera board-level components. For cameras housed in a case, it is the ambient temperature within the case. For more information about camera temperature, see Case Temperature and Heat Dissipation on page 18.

Camera Power—Allows the user to power up or power down the camera.

Pixel Clock Frequency—This specifies the current pixel clock frequency (in Hz) in IEEE-754 32-bit floating point format. The camera pixel clock defines an upper limit to the rate at which pixels can be read off the image sensor.

Horizontal Line Frequency—This specifies the current horizontal line frequency in Hz in IEEE-754 32-bit floating point format.

3.2.1 SERIAL_NUMBER: 1F20h

Format:

Field	Bit	Description
Serial_Number	[0-31]	Unique serial number of camera (read-only)

3.2.2 MAIN_BOARD_INFO: 1F24h

Format:

Field	Bit	Description
Major_Board_Design	[0-11]	0x6: Ladybug Head 0x7: Ladybug Base Unit 0x10: Flea 0x18: Dragonfly2 0x19: Flea2 0x1A: Firefly MV 0x1C: Bumblebee2 0x1F: Grasshopper 0x22: Grasshopper2 0x21: Flea2G-13S2 0x24: Flea2G-50S5 0x26: Chameleon 0x27: Grasshopper Express 0x29: Flea3 FireWire 14S3/20S4 0x2A: Flea3 FireWire 03S3 0x2B: Flea3 FireWire 03S1 0x2F: Flea3 GigE 14S3/20S4 0x32: Flea3 GigE 13S2 0x34: Flea3 USB 3.0 0x36: Zebra2 0x39: Flea3 GigE 03S2/08S2 0x3E: Flea3 GigE 50S5 0x3F: Flea3 GigE 28S4 0x40: Flea3 GigE 03S1
Minor_Board_Rev	[12-15]	Internal use
Reserved	[16-31]	Reserved

Copyright ©2011-2012 Point Grey Research Inc.

3.2.3 SENSOR_BOARD_INFO: 1F28h



The interpretation of this register varies depending on the camera type, as defined in the MAIN_ BOARD_ INFO register 0x1F24 (page 30). Read MAIN_ BOARD_INFO to determine how to use the Sensor_ Type_x fields.

Format:

Field	Bit	Description
Sensor_Type_1	[0-11]	tbd
Minor_Board_Rev	[12-15]	Internal use
Reserved	[16-27]	Reserved
Sensor_Type_2	[28-31]	tbd

3.2.4 VOLTAGE: 1A50h – 1A54h

Format:

Offset	Name	Field	Bit	Description
1A50h	VOLTAGE_LO_INQ	Presence_Inq	[0]	Presence of this feature 0: Not available, 1: Available
		-	[1-7]	Reserved
			[8-19]	Number of voltage registers supported
		-	[20-31]	Reserved
1A54h	VOLTAGE_HI_INQ		[0-31]	32-bit offset of the voltage CSRs, which report the current voltage in Volts using the 32-bit floating-point IEEE/REAL*4 format.

3.2.5 CURRENT: 1A58h – 1A5Ch

Format:

Offset	Name	Field	Bit	Description
1A58h	CURRENT_ LO_INQ	Presence_ Inq	[0]	Presence of this feature 0: Not available, 1: Available
			[1-7]	Reserved
			[8-19]	Number of current registers supported
			[20-31]	Reserved
1A5Ch	CURRENT_ HI_INQ		[0-31]	32-bit offset of the current registers, which report the current in amps using the 32-bit floating-point IEEE/REAL*4 format.

Copyright ©2011-2012 Point Grey Research Inc.

3.2.6 TEMPERATURE: 82Ch

Format:

Field	Bit	Description
Presence_Inq	[0]	Presence of this feature 0: Not Available, 1: Available
	[1-19]	Reserved
Value	[20-31]	Value. In Kelvin (0°C = 273.15K) in increments of one-tenth (0.1) of a Kelvin

3.2.7 PIXEL_CLOCK_FREQ: 1AF0h

Format:

Field	Bit	Description
Pixel_Clock_Freq	[0-31]	Pixel clock frequency in Hz (read-only).

3.2.8 HORIZONTAL_LINE_FREQ: 1AF4h

Format:

Field	Bit	Description
Horizontal_Line_Freq	[0-31]	Horizontal line frequency in Hz (read-only).

3.3 User Memory Channels

The camera can save and restore settings and imaging parameters via on-board configuration sets, also known as memory channels. This is useful for saving default power-up settings, such as gain, shutter, video format and frame rate, and others that are different from the factory defaults.

Memory channel 0 stores the factory default settings that can always be restored. Two additional memory channels are provided for custom default settings. The camera will initialize itself at power-up, or when explicitly reinitialized, using the contents of the last saved memory channel. Attempting to save user settings to the (read-only) factory defaults channel will cause the camera to switch back to using the factory defaults during initialization.

The following camera settings are saved in memory channels.

Frame Rate (including Absolute Value) (page 76)	Image Data Format
Current Frame Rate (page 76)	Image Position and Image Size (page 145)
Current Video Mode (page 76)	Current Video Format (page 76)
Camera Power (page 29)	Frame Information (page 119)
Brightness (including Absolute Value) (page 95)	Trigger Mode (page 84)
Auto Exposure (including Absolute Value and Range) (page 114)	Trigger Delay (including Absolute Value) (page 89)

Copyright ©2011-2012 Point Grey Research Inc.

Sharpness (page 101)	Shutter (including Absolute Value, Auto Shutter Range, and Shutter Delay) (page 111)
White Balance (page 109)	Gain (including Absolute Value and Auto Gain Range) (page 96)
Hue (page 100)	GPIO Pin Modes (page 50)
Saturation (page 98)	GPIO Strobe Modes (page 42)
Gamma (including Absolute Value) (page 103)	GPIO PWM Modes (page 50)
Color Coding ID (page 146)	Format 7 Bytes per Packet

3.3.1 MEMORY_SAVE: 618h

Format:

Field	Bit	Description
Memory_Save	[0]	1 = Current status modes are saved to MEM_SAVE_CH (Self cleared)
	[1-31]	Reserved

3.3.2 MEM_SAVE_CH: 620h

Format:

Field	Bit	Description
Mem_Save_Ch	[0-3]	Write channel for Memory_Save command. Shall be >=0001 (0 is for factory default settings) See BASIC_FUNC_INQ register.
	[4-31]	Reserved

3.3.3 CUR_MEM_CH: 624h

Format:

Field	Bit	Description
Cur_Mem_Ch	[0-3]	Read: The current memory channel number Write: Loads the camera status, modes and values from the specified memory channel.
	[4-31]	Reserved

3.3.4 Memory Channel Registers

The values of the following registers are saved in memory channels.

Copyright ©2011-2012 Point Grey Research Inc.

Register Name	Offset
CURRENT_FRAME_RATE	600h
CURRENT_VIDEO_MODE	604h
CURRENT_VIDEO_FORMAT	608h
CAMERA_POWER	610h
CUR_SAVE_CH	620h
BRIGHTNESS	800h
AUTO_EXPOSURE	804h
SHARPNESS	808h
WHITE_BALANCE	80Ch
HUE	810h
SATURATION	814h
GAMMA	818h
SHUTTER	81Ch
GAIN	820h
IRIS	824h
FOCUS	828h
TRIGGER_MODE	830h
TRIGGER_DELAY	834h
FRAME_RATE	83Ch
PAN	884h
TILT	888h
ABS_VAL_AUTO_EXPOSURE	908h
ABS_VAL_SHUTTER	918h
ABS_VAL_GAIN	928h
ABS_VAL_BRIGHTNESS	938h
ABS_VAL_GAMMA	948h
ABS_VAL_TRIGGER_DELAY	958h
ABS_VAL_FRAME_RATE	968h
IMAGE_DATA_FORMAT	1048h
AUTO_EXPOSURE_RANGE	1088h
AUTO_SHUTTER_RANGE	1098h
AUTO_GAIN_RANGE	10A0h
GPIO_XTRA	1104h
SHUTTER_DELAY	1108h
GPIO_STRPAT_CTRL	110Ch
GPIO_CTRL_PIN_x	1110h, 1120h, 1130h, 1140h
GPIO_XTRA_PIN_x	1114h, 1124h, 1134h, 1144h

Copyright ©2011-2012 Point Grey Research Inc.

Register Name	Offset
GPIO_STRPAT_MASK_PIN_x	1118h, 1128h, 1138h, 1148h
FRAME_INFO	12F8h
IMAGE_POSITION	008h
IMAGE_SIZE	00Ch
COLOR_CODING_ID	010h
UDP_PORT	1F1Ch
DESTINATION_IP	1F34h

3.4 On-Camera Frame Buffer

The camera has 32 MB of memory that can be used for temporary image storage. This may be useful in cases such as:

- Retransmission of an image is required due to data loss or corruption.
- Multiple camera systems where there is insufficient bandwidth to capture images in the desired configuration.

All images pass through the frame buffer mechanism. This introduces relatively little delay in the system because the camera does not wait for a full image to arrive in the buffer before starting transmission but rather lags only a few lines behind.

The user can cause images to accumulate by enabling the frame buffer. This effectively disables the transmission of images in favor of accumulating them in the frame buffer. The user is then required to use the remaining elements of the interface to cause the transmission of the images.

The buffer system is circular in nature, storing only the last 32 MB worth of image data. The number of images that this accommodates depends on the currently configured image size.

The standard user interaction involves the following steps:

1. **Configure the imaging mode.**
   This first step involves configuring the format, mode and frame rate for acquiring images. This can be done by either directly manipulating the registers or using the higher level functionality associated with the software library being used. Depending on the software package, this may involve going so far as to configure the camera, perform bandwidth negotiation and grab an image. In cases where bandwidth is restricted, the user will want to disable transmission and free the bandwidth after the camera is configured.
2. **Enable frame buffer accumulation**
   The second step involves enabling the frame buffer. Enabling this results in images being accumulated in the frame buffer rather than immediately being transmitted.
3. **Negotiate bandwidth with the camera**
   Having accumulated some number of images on the camera, bandwidth will have to be renegotiated if it has not been done already. In most cases, this will involve effectively starting the camera in the imaging mode configured in step (1).
4. **Disable isochronous transmission and enable buffered image transfer**
   To transfer buffered images, isochronous data transmission must be disabled, and transfer data enabled.
5. **Transmit images off of the camera**
   The final step involves setting One Shot/Multi-shot in order to cause the camera to transmit one or more images from the frame buffer over the data interface.

Copyright ©2011-2012 Point Grey Research Inc.

Although it is possible to repeatedly transmit the same image, there is no way to access images that are older than the last image transmitted.

Whether by enabling trigger or disabling isochronous data, switching out of a free running mode leaves the last image transmitted in an undefined state.

The frame buffer is volatile memory that is erased after power cycling. To store images on the camera after power cycling, use Non-Volatile Flash Memory on page 38. Accessing flash memory is significantly slower than accessing the frame buffer, and storage is limited.

3.4.1 IMAGE_RETRANSMIT: 634h

This register provides an interface to the camera's frame buffer functionality.

Transmitting buffered data is available when continuous shot is disabled. Either One shot or Multi shot can be used to transmit buffered data when *Transfer_Data_Select* = 1. Multi shot is used for transmitting one or more (as specified by *Count_Number*) buffered images. One shot is used for retransmission of the last image from the retransmit buffer.

Image data is stored in a circular image buffer when *Image_Buffer_Ctrl* = 1. If the circular buffer overflows, the oldest image in the buffer is overwritten.

Transmitted data is always stored in the retransmit buffer. If a last or previous image does not exist, (for example, an image has not been acquired since a video format or mode change), the camera still transmits an image from the retransmit buffer, but its contents are undefined.

The image buffer is initialized when *Image_Buffer_Ctr* is written to '1'. Changing the video format, video mode, image_size, or color_coding causes the image buffer to be initialized and *Max_Num_Images* to be updated.

Format:

Field	Bit	Description
Image_Buffer_Ctrl	[0]	Image Buffer On/Off Control 0: OFF, 1: ON
Transfer_Data_Select	[1]	Transfer data path 0: Live data, 1: Buffered image data Ignored if ISO_EN=1
	[2-7]	Reserved
Max_Num_Images	[8-19]	Maximum number of images that can be stored in the current video format. Must be greater than zero. This field is read only.
Number_of_Images	[20-31]	The number of images currently in buffer. This field is read only.

3.4.2 Example: Retransmitting in Image External Mode Using Registers

There are occasions where it might be beneficial to retransmit an image when in an external trigger mode. Having configured the camera to be running in an external trigger mode, the user can cause the camera to retransmit an image by doing the following:

Copyright ©2011-2012 Point Grey Research Inc.

1. **Read the current state of the IMAGE_RETRANSMIT register 634h:**

Read	634h	00 07 00 00

Reading register 634h indicates that the frame buffer mechanism is currently disabled, and in the current imaging mode, the system is capable of storing up to 7 images.

2. **Enable image hold:**

Write	634h	80 07 00 00

Setting bit 0 of register 634h to 1 enables images to accumulate in the frame buffer.

3. **Enable buffered image transfer:**

Write	634h	C0 07 00 00

Setting bit 1 of register 634h to 1 enables transfer of buffered image data.

4. **Retransmit the last image:**

Write	61Ch	80 00 00 00

Setting bit 0 of register 61Ch to 1 causes the last image to be retransmitted.

5. **Disable buffered image transfer:**

Write	634h	00 07 00 00

Writing 0 to bits 0 and 1 of register 634h disables buffered image hold and transfer, and returns the camera to normal operation.

3.4.3 Example: Storing Images for Later Transmission Using Registers

Again, assuming the camera is configured to run in an external trigger mode:

1. **Read the current state of register 634h:**

Read	634h	00 07 00 00

Again, this value indicates that the frame buffer mechanism is currently disabled, and in the current imaging mode the system is capable of storing up to 7 images.

2. **Enable hold image mode and buffer data transfer:**

Write	634h	C0 07 00 00

Setting bits 0 and 1 of register 634h enables image buffer hold and transfer, resulting in images being accumulated in the frame buffer for later transmission.

3. **Acquire 4 images:**

Write	62Ch	80 00 00 00
Write	62Ch	80 00 00 00
Write	62Ch	80 00 00 00
Write	62Ch	80 00 00 00
Read	634h	C0 07 00 04

Writing to software trigger register 62Ch 4 times causes 4 images to accumulate in the frame buffer. The last 12 bits of register 634h will now indicate that there are 4 images in the frame buffer.

Copyright ©2011-2012 Point Grey Research Inc.

4. **Transmit two images:**

Write	61Ch	80 00 00 00
Write	61Ch	80 00 00 00
Read	634h	C0 07 00 02

Writing 1 to bit 0 of register 61Ch results in a single image being transmitted and the number of images available being decremented by one. After transmitting two images, a subsequent read of the register indicates that there are two images left.

3.5 Non-Volatile Flash Memory

The camera has 1 MB of non-volatile memory for users to store data.

Related Knowledge Base Articles

Title	Article
Storing data in on-camera flash memory	Knowledge Base Article 341

3.5.1 DATA_FLASH_CTRL: 1240h

This register controls access to the camera's on-board flash memory. Each bit in the data flash is initially set to 1.

The user can transfer as much data as necessary to the offset address (1244h), then perform a single write to the control register to commit the data to flash. Any modified data is committed by writing to this register, or by accessing any other control register.

Format:

Field	Bit	Description
Presence_Inq	[0]	Presence of this feature 0: Not Available, 1: Available
	[1-5]	Reserved
Clean_Page	[6]	Read: 0: Page is dirty, 1: Page is clean Write: 0: No-op, 1: Write page to data flash
	[7]	Reserved
Page_Size	[8-19]	8 == 256 byte page 9 == 512 byte page
Num_Pages	[20-31]	11 == 2048 pages 13 == 8192 pages

3.5.2 DATA_FLASH_DATA: 1244h

This register provides the 32-bit offset to the start of where the data is stored in the flash memory.

Copyright ©2011-2012 Point Grey Research Inc.

Format:

Offset	Field	Bit	Description
1244h	DF_Data	[0-31]	32-bit offset to the start of data

3.6 Camera Firmware

Firmware is programming that is inserted into the programmable read-only memory (programmable ROM) of most Point Grey cameras. Firmware is created and tested like software. When ready, it can be distributed like other software and installed in the programmable read-only memory by the user.

The latest firmware versions often include significant bug fixes and feature enhancements. To determine the changes made in a specific firmware version, consult the Release Notes.

Firmware is identified by a version number, a build date, and a description.

Related Knowledge Base Articles

Title	Article
PGR software and firmware version numbering scheme/standards	Knowledge Base Article 96
Determining the firmware version used by a PGR camera	Knowledge Base Article 94
Should I upgrade my camera firmware or software?	Knowledge Base Article 225

3.6.1 Determining Firmware Version

To determine the firmware version number of your camera:

- In FlyCapture, open the Camera Control dialog and click on Camera Information.
- If you're implementing your own code, use flycaptureGetCameraRegister().
- Query the Firmware Version register 1F60h

3.6.2 Upgrading Camera Firmware

Camera firmware can be upgraded or downgraded to later or earlier versions using the UpdatorGUI program that is bundled with the FlyCapture SDK available from the Point Grey downloads site.

Before upgrading firmware:

- Install the SDK, downloadable from the Point Grey downloads site.
- Ensure that FlyCapture2.dll is installed in the same directory as UpdatorGUI3.
- Download the firmware file from the Point Grey downloads site.

3.6.3 FIRMWARE_VERSION: 1F60h

This register contains the version information for the currently loaded camera firmware.

Copyright ©2011-2012 Point Grey Research Inc.

Format:

Field	Bit	Description
Major	[0-7]	Major revision number
Minor	[8-15]	Minor revision number
Type	[16-19]	Type of release: 0: Alpha 1: Beta 2: Release Candidate 3: Release
Revision	[20-31]	Revision number

3.6.4 FIRMWARE_BUILD_DATE: 1F64h

Format:

Field	Bit	Description
Build_Date	[0-31]	Date the current firmware was built in Unix time format (read-only)

3.6.5 FIRMWARE_DESCRIPTION: 1F68-1F7Ch

Null padded, big-endian string describing the currently loaded version of firmware.

Copyright ©2011-2012 Point Grey Research Inc.

4 Input/Output Control

4.1 General Purpose Input/Output (GPIO)

The camera has an 8-pin GPIO connector on the back of the case; refer to the diagram below for wire color-coding. The connector is a Hirose HR25 8 pin connector (Mfg P/N: HR25-7TR-8SA). Male connectors (Mfg P/N: HR25-7TP-8P) can be purchased from Digikey (P/N: HR702-ND).

Table 4.1: GPIO pin assignments (as shown looking at rear of camera)

Diagram	Pin	Function	Description
	1	I0	Opto-isolated input (default Trigger in)
	2	O1	Opto-isolated output
	3	IO2	Input/Output/serial transmit (TX)
	4	IO3	Input/Output/serial receive (RX)
	5	GND	Ground for bi-directional IO, V_{EXT}, +3.3 V pins
	6	OPTO_GND	Ground for opto-isolated IO pins
	7	V_{EXT}	Allows the camera to be powered externally
	8	+3.3 V	Power external circuitry up to 150 mA

Power can be provided through the GPIO interface. The camera selects whichever power source is supplying a higher voltage.

Point Grey sells a 12 V wall-mount power supply equipped with a HR25 8-pin GPIO wiring harness for connecting to the camera (**Part No. ACC-01-9006**). For more information, see the miscellaneous product accessories page on the Point Grey website.

For details on GPIO circuits, see GPIO Electrical Characteristics on page 59.

4.2 GPIO Modes

4.2.1 GPIO Mode 0: Input

When a GPIO pin is put into GPIO Mode 0 it is configured to accept external trigger signals. See Serial Communication on page 51.

4.2.2 GPIO Mode 1: Output

When a GPIO pin is put into GPIO Mode 1 it is configured to send output signals.



*Do **not** connect power to a pin configured as an output (effectively connecting two outputs to each other). Doing so can cause damage to camera electronics.*

Copyright ©2011-2012 Point Grey Research Inc.

4.2.3 GPIO Mode 2: Asynchronous (External) Trigger

When a GPIO pin is put into GPIO Mode 2, and an external trigger mode is enabled (which disables isochronous data transmission), the camera can be asynchronously triggered to grab an image by sending a voltage transition to the pin. See Asynchronous Triggering on page 81.

4.2.4 GPIO Mode 3: Strobe

A GPIO pin in GPIO Mode 3 will output a voltage pulse of fixed delay, either relative to the start of integration (default) or relative to the time of an asynchronous trigger. A GPIO pin in this mode can be configured to output a variable strobe pattern. See Programmable Strobe Output below.

4.2.5 GPIO Mode 4: Pulse Width Modulation (PWM)

When a GPIO pin is set to GPIO Mode 4, the pin will output a specified number of pulses with programmable high and low duration. See Pulse Width Modulation (PWM) on page 50.

4.3 Programmable Strobe Output

The camera is capable of outputting a strobe pulse off select GPIO pins that are configured as outputs. The start of the strobe can be offset from either the start of exposure (free-running mode) or time of incoming trigger (external trigger mode). By default, a pin that is configured as a strobe output will output a pulse each time the camera begins integration of an image.

The duration of the strobe can also be controlled. Setting a strobe duration value of zero produces a strobe pulse with duration equal to the exposure (shutter) time.

Multiple GPIO pins, configured as outputs, can strobe simultaneously.

Connecting two strobe pins directly together is not supported. Instead, place a diode on each strobe pin.

The camera can also be configured to output a variable strobe pulse pattern. The strobe pattern functionality allows users to define the frames for which the camera will output a strobe. For example, this is useful in situations where a strobe should only fire:

- Every Nth frame (e.g. odd frames from one camera and even frames from another); or
- N frames in a row out of T (e.g. the last 3 frames in a set of 6); or
- Specific frames within a defined period (e.g. frames 1, 5 and 7 in a set of 8)

Related Knowledge Base Articles

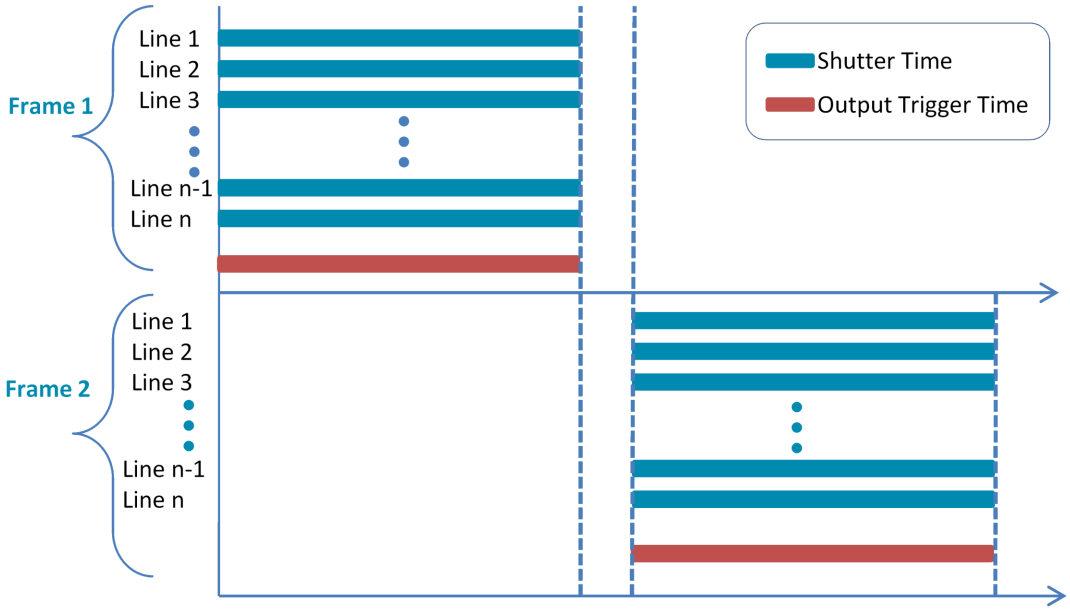
Title	Article
Buffering a GPIO pin strobe output signal using an optocoupler to drive external devices	Knowledge Base Article 200
GPIO strobe signal continues after isochronous image transfer stops	Knowledge Base Article 212
Setting a GPIO pin to output a strobe signal pulse pattern	Knowledge Base Article 207

Copyright ©2011-2012 Point Grey Research Inc.

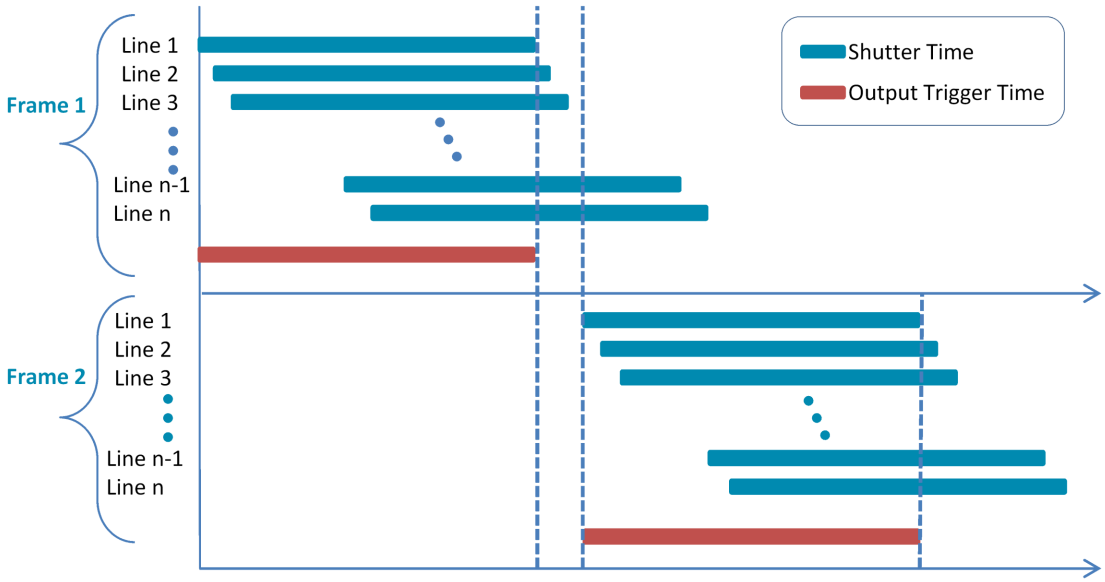
4.3.1 Synchronizing Image Capture with an Output Trigger or Strobe

The following diagrams illustrate the timing of an output trigger, such as a strobe, with both a global and a rolling shutter in free-running mode. Regardless of the type of shutter on the camera, the output trigger is synchronized to the shutter time of line 1 in each frame.

With a global shutter camera all lines of a frame are exposed at the same time. This means that the output trigger for a frame starts after the previous frame has completed exposure.



With a rolling shutter camera the lines of a frame are exposed in a staggered sequence. This means that the output trigger for a frame may start before the previous frame has completed exposure.



Copyright ©2011-2012 Point Grey Research Inc.

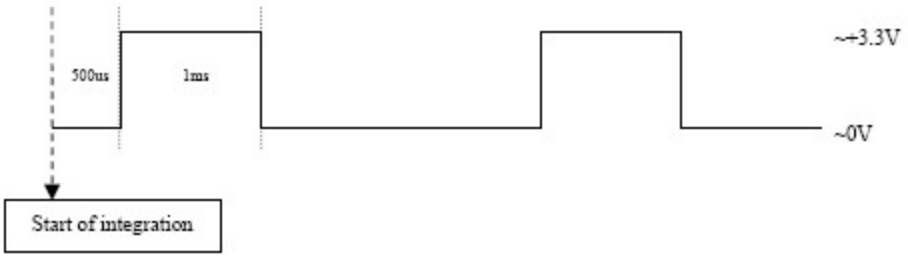
As an example, if the output trigger is a strobe light, the light from the second frame will appear in the first frame as well. To reduce this effect, slow the frame rate to increase the time between frames. If the slower frame rate is not feasible, or the reduction of the effect not complete, a camera with a global shutter is recommended.

For more information on types of shutters see Global Shutter on page 79 and Rolling Shutter on page 79.

4.3.2 Example: Setting a GPIO Pin to Strobe (Using the Camera Registers)

Consider the following example strobe scenario:

- Desired strobe output pin: GPIO2
- Strobe output characteristics: 500us delay from start of shutter, 1ms high duration (see below)



Determine the Default Output Pins

Electrically, general purpose input/output pins are in one of two states: input or output. In order for a GPIO pin to act as a strobe output source, it must be configured as an output. To determine which of the GPIO pins are outputs by default, get the value of the PIO_DIRECTION register 0x11F8 (page 91). The IOx_Mode fields (bits 0-3) report the current state of the corresponding pin. For example:

0x11F8 = 0x4000 0000

4	0	0	0	0	0	0	0	Hex
0100	0000	0000	0000	0000	0000	0000	0000	Binary
0-7		8-15		16-23		24-31		Bits

Each of the first four bits represents the current state of its associated GPIO pin: ‘0’ indicates it is an input/trigger, and ‘1’ indicates it is an output/strobe. In the example above, 0x4 = 0100 in binary, so GPIO1 is configured as an output and GPIO0, GIPIO2 and GPIO3 are inputs.

Set the Desired Pin as an Output

Following the example above, assume we want to configure GPIO2 to be an output. To do this, set the appropriate bit of the PIO_DIRECTION register 0x11F8 (in this case bit 2) to ‘1’. In the example above, we would therefore do the following register write:

```
0x11F8 = 0x6000 0000
```


Copyright ©2011-2012 Point Grey Research Inc.

Determine Strobe Support

The next step is to determine whether our desired strobe pin, GPIO2, is capable of outputting a strobe signal. To do this, get the value of the appropriate STROBE_x_INQ register (page 47); in this case, the STROBE_0_INQ register 0x1408. Assuming we have correctly configured GPIO2 to be an output, we should get a value of:

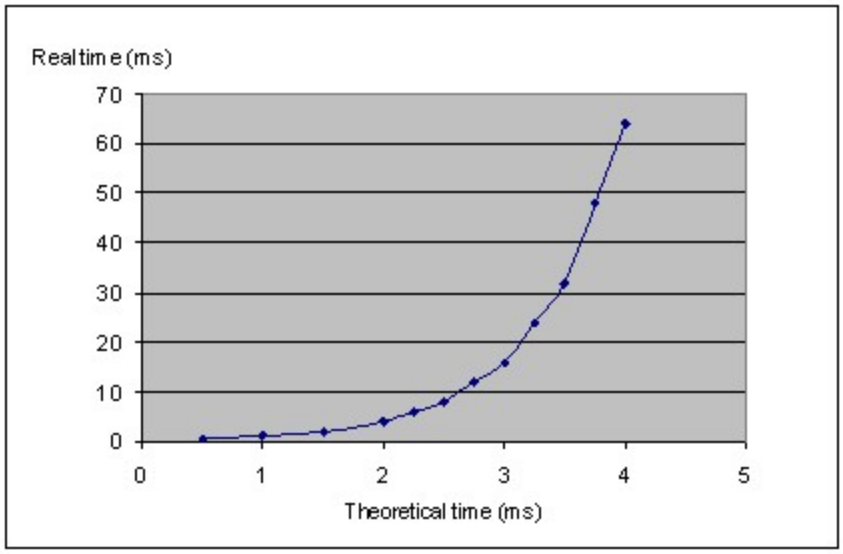
8	E	0	0	0	F	F	F	Hex
1000	1110	0000	0000	0000	1111	1111	1111	Binary
0-7		8-15		16-23		24-31		Bits

Bit 0 is a '1', which confirms that the strobe functionality is present on this GPIO pin. Bit 4 points to the ability to read the value of this feature. Bit 5 indicates the ability to turn the strobe on and off, and bit 6 indicates that we can change the strobe signal polarity. Bits 8-19 are '0', which means the minimum strobe duration is zero. Bits 20-31 are '0xFFF' or 4096 in decimal, so the maximum strobe delay and duration is 4096.

Configure the Desired Pin to Output a Strobe

At this point, GPIO2 is set as an output pin and we know it can be a strobe signal source. Now, we need to enable it as a strobe source by "turning it on" using the GPIO pin's STROBE_x_CNT register (page 47).

Continuing our example, the desired strobe pin is GPIO2. Therefore, we want to look at the STROBE_2_CNT register 0x1508. The values that we enter in the *Delay_Value* and *Duration_Value* fields of this register are determined as follows: for values up to approximately 0x400 (1024 decimal), each value increment is a tick of a 1.024MHz clock. Values between 0x401 and 0xFF become non-linear in the manner shown in the figure below:



Duration_Value/Delay_Value	Real Time (ms)
0x050	0.078
0x200	0.5
0x400	1

Copyright ©2011-2012 Point Grey Research Inc.

Duration_Value/Delay_Value	Real Time (ms)
0x600	2
0x800	4
0x900	6
0xA00	8
0xB00	12
0xC00	16
0xD00	24
0xE00	32
0xF00	48
0xFFF	63.93

For example, to achieve a 500us delay and 1ms duration we calculate:

Delay_Value = 0.0005s * 1024000Hz = 512 = 0x200

Duration_Value = 0.001s * 1024000Hz = 1024 = 0x400

To finish configuring GPIO2 to output a strobe pulse of 500us delay from the start of integration and 1ms high duration (high active output), we make the following final register write:

```
0x1508 = 0x8320 0400
```

4.3.3 Example: Setting a GPIO Pin to Strobe (Using the FlyCapture API)

The following FlyCapture 2.x code sample uses the C++ interface to do the following:

- Configures GPIO1 as the strobe output pin.
- Enables strobe output.
- Specifies an active high (rising edge) strobe signal.
- Specifies that the strobe signal begin 1 ms after the shutter opens.
- Specifies the duration of the strobe as 1.5 ms.

Assuming a `Camera` object `cam`:

```
StrobeControl mStrobe;
mStrobe.source = 1;
mStrobe.parameter = 0;
mStrobe.onOff = true;
mStrobe.polarity = 1;
mStrobe.delay = 1.0f;
mStrobe.duration = 1.5f
cam.SetStrobeControl(&mStrobe);
```


Copyright ©2011-2012 Point Grey Research Inc.

4.3.4 Strobe Signal Output Registers

This section describes the control and inquiry registers for the Strobe Signal functionality.

4.3.4.1 Strobe Output Registers



To calculate the base address for an offset CSR:

1. *Query the offset inquiry register.*
2. *Multiple the value by 4. (The value is a 32-bit offset.)*
3. *Remove the 0xF prefix from the result. (i.e., F70000h becomes 70000h)*

Format:

Offset	Name	Field	Bit	Description
48Ch	STROBE_ OUTPUT_CSR_ INQ	Strobe_Output_ Quadlet_Offset	[0-31]	32-bit offset of the Strobe output signal CSRs from the base address of initial register space
Base + 0h	STROBE_CTRL_ INQ	Strobe_0_Inq	[0]	Presence of strobe 0 signal
		Strobe_1_Inq	[1]	Presence of strobe 1 signal
		Strobe_2_Inq	[2]	Presence of strobe 2 signal
		Strobe_3_Inq	[3]	Presence of strobe 3 signal
		-	[4-31]	Reserved
Base + 100h	STROBE_0_INQ	Presence_Inq	[0]	Presence of this feature
			[1-3]	Reserved
		ReadOut_Inq	[4]	Ability to read the value of this feature
		On_Off_Inq	[5]	Ability to switch feature ON and OFF
		Polarity_Inq	[6]	Ability to change signal polarity
			[7]	Reserved
		Min_Value	[8-19]	Minimum value for this feature control
		Max_Value	[20-31]	Maximum value for this feature control
Base + 104h	STROBE_1_INQ	Same definition as Strobe_0_Inq		
Base + 108h	STROBE_2_INQ	Same definition as Strobe_0_Inq		
Base + 10Ch	STROBE_3_INQ	Same definition as Strobe_0_Inq		

Copyright ©2011-2012 Point Grey Research Inc.

Offset	Name	Field	Bit	Description
Base + 200h	STROBE_0_CNT	Presence_Inq	[0]	Presence of this feature 0: Not Available, 1: Available
			[1-5]	Reserved
		On_Off	[6]	Read: read a status Write: ON or OFF this function 0: OFF, 1: ON If this bit = 0, other fields will be read only. *When ON, strobe signals continue to output after the camera stops streaming images. To stop strobe output, this bit must be explicitly turned OFF.*
		Signal_Polarity	[7]	Select signal polarity If Polarity_Inq = 1: Read to get strobe output polarity Write to change strobe output polarity If Polarity_Inq = 0, then Read only 0: Low active output, 1: High active output
		Delay_Value	[8-19]	Delay after start of exposure until the strobe signal asserts
		Duration_Value	[20-31]	Duration of the strobe signal A value of 0 means de-assert at the end of exposure, if required.
Base + 204h	STROBE_1_CNT	Same definition as Strobe_0_ Cnt		
Base + 208h	STROBE_2_CNT	Same definition as Strobe_0_Cnt		
Base + 20Ch	STROBE_3_CNT	Same definition as Strobe_0_Cnt		

4.3.4.2 GPIO_STRPAT_CTRL: 110Ch

This register provides control over a shared 4-bit counter with programmable period. When the *Current_Count* equals N a GPIO pin will only output a strobe pulse if bit[N] of the GPIO_STRPAT_MASK_PIN_x register's *Enable_ Pin* field is set to '1'.

Field	Bit	Description
Presence_Inq	[0]	Presence of this feature 0: Not Available, 1: Available
	[1-18]	Reserved
Count_Period	[19-23]	Controls the period of the strobe pattern Valid values: 1..16
	[24-27]	Reserved

Copyright ©2011-2012 Point Grey Research Inc.

Field	Bit	Description
Current_Count	[28-31]	Read-only The value of the bit index defined in GPIO_x_STRPAT_MASK that will be used during the next image's strobe. *Current_Count* increments at the same time as the strobe start signal occurs.

4.3.4.3 GPIO_STRPAT_MASK_PIN: 1118h-1148h

These registers define the actual strobe pattern to be implemented by GPIO pins in conjunction with the *Count_Period* defined in GPIO_STRPAT_CTRL register 110Ch.

For example, if *Count_Period* is set to '3', bits 16-18 of the *Enable_Mask* can be used to define a strobe pattern. An example strobe pattern might be bit 16=0, bit 17=0, and bit 18=1, which will cause a strobe to occur every three frames (when the *Current_Count* is equal to 2).

Pin	Register	
0	GPIO_STRPAT_MASK_PIN_0	1118h
1	GPIO_STRPAT_MASK_PIN_1	1128h
2	GPIO_STRPAT_MASK_PIN_2	1138h
3	GPIO_STRPAT_MASK_PIN_3	1148h

Format:

Field	Bit	Description
Presence_Inq	[0]	Presence of this feature 0: Not Available, 1: Available
	[1-15]	Reserved
Enable_Mask	[16-31]	Bit field representing the strobe pattern used in conjunction with *Count_Period* in GPIO_STRPAT_CTRL 0: Do not output a strobe, 1: Output a strobe

4.3.4.4 GPIO_XTRA: 1104h

The GPIO_XTRA register controls when a strobe starts: relative to the start of integration (default) or relative to the time of an asynchronous trigger.

Format:

Field	Bit	Description
Strobe_Start	[0]	Current Mode 0: Strobe start is relative to start of integration (default) 1: Strobe start is relative to external trigger
	[1-31]	Reserved

Copyright ©2011-2012 Point Grey Research Inc.

4.4 Pulse Width Modulation (PWM)

When a GPIO pin is set to PWM (GPIO Mode 4), the pin will output a specified number of pulses with programmable high and low duration.

The pulse is independent of integration or external trigger. There is only one real PWM signal source (i.e. two or more pins cannot simultaneously output different PWMs), but the pulse can appear on any of the GPIO pins.

The units of time are generally standardized to be in ticks of a 1.024 MHz clock. A separate GPIO pin may be designated as an "enable pin"; the PWM pulses continue only as long as the enable pin is held in a certain state (high or low).



The pin configured to output a PWM signal (PWM pin) remains in the same state at the time the 'enable pin' is disabled. For example, if the PWM is in a high signal state when the 'enable pin' is disabled, the PWM pin remains in a high state. To re-set the pin signal, you must re-configure the PWM pin from GPIO Mode 4 to GPIO Mode 1.

4.4.1 GPIO_CTRL_PIN: 1110h-1140h

These registers provide control over the GPIO pins.

Pin	Register	
0	GPIO_CTRL_PIN_0	1110h
1	GPIO_CTRL_PIN_1	1120h
2	GPIO_CTRL_PIN_2	1130h
3	GPIO_CTRL_PIN_3	1140h

Format:

Field	Bit	Description
Presence_Inq	[0]	Presence of this feature 0: Not Available, 1: Available
	[1-11]	Reserved
Pin_Mode	[12-15]	Current GPIO Mode: 0: Input 1: Output 2: Asynchronous Trigger 3: Strobe 4: Pulse width modulation (PWM)
	[16-30]	For Modes 0, 1, and 2: Reserved For Mode 4 (PWM:) see below

Copyright ©2011-2012 Point Grey Research Inc.

Field	Bit	Description
Data	[31]	For Modes 0, 1, and 2: Data field 0 = 0 V (falling edge), 1 = +3.3 V (rising edge) For Mode 4 (PWM): see below
Pwm_Count	[16-23]	Number of PWM pulses Read: The current count; counts down the remaining pulses. After reaching zero, the count does not automatically reset to the previously-written value. Write: Writing the number of pulses starts the PWM. Write 0xFF for infinite pulses. (Requires write of 0x00 before writing a different value.)
	[24]	Reserved
En_Pin	[25-27]	The GPIO pin to be used as a PWM enable i.e. the PWM continues as long as the En_Pin is held in a certain state (high or low).
	[28]	Reserved
Disable_Pol	[29]	Polarity of the PWM enable pin (En_Pin) that will disable the PWM. If this bit is 0, the PWM is disabled when the PWM enable pin goes low.
En_En	[30]	0: Disable enable pin (En_Pin) functionality 1: Enable En_Pin functionality
Pwm_Pol	[31]	Polarity of the PWM signal 0: Low, 1: High

4.4.2 GPIO_XTRA_PIN: 1114h-1144h

These registers contain mode specific data for the GPIO pins. Units are ticks of a 1.024MHz clock.

Pin	Register	
0	GPIO_XTRA_PIN_0	1114h
1	GPIO_XTRA_PIN_1	1124h
2	GPIO_XTRA_PIN_2	1134h
3	GPIO_XTRA_PIN_3	1144h

Format:

Field	Bit	Description
Mode_Specific_1	[0-15]	GPIO_MODE_4: Low period of PWM pulse (if Pwm_Pol = 0)
Mode_Specific_2	[16-31]	GPIO_MODE_4: High period of PWM pulse (if Pwm_Pol = 0)

4.5 Serial Communication

The camera is capable of serial communications at baud rates up to 115.2 Kbps via the on-board serial port built into the camera's GPIO connector. The serial port uses TTL digital logic levels. If RS signal levels are required, a level converter must be used to convert the TTL digital logic levels to RS voltage levels.

Copyright ©2011-2012 Point Grey Research Inc.

Related Knowledge Base Articles

Title	Article
Configuring and testing the RS-232 serial port	Knowledge Base Article 151

SIO Buffers

Both the transmit and receive buffers are implemented as circular buffers that may exceed the 255 byte maximum.

- The transmit buffer size is 512 B.
- The receive buffer size is 8 KB.

Block reads and writes are both supported. Neither their length nor their address have to be 32-bit aligned or divisible by 4.

4.5.1 Serial Output Transaction (Transmitting Data)

A general overview of the steps for a serial output transaction, where the camera is transmitting data to a receiving serial port, is as follows:

1. In TRANSMIT_BUFFER_STATUS_CONTROL register 7000Ch, read the available data space of the current transmit buffer *TBUF_ST* field.
2. Write characters to the SIO_DATA_REGISTER 70100h.
3. In TRANSMIT_BUFFER_STATUS_CONTROL register 7000Ch, write the valid output data length to the *TBUF_CNT* field to start transmit.
4. To output more characters, repeat step 1.

4.5.1.1 Example: Transmitting Characters to a PC

This example describes how to send four (4) characters from the camera to the serial port on a PC. Microsoft's HyperTerminal program *(Start Menu > All Programs > Accessories > Communications)* is used to display the characters received from the camera. The process detailed by the table below involves the user enabling transmit, verifying that the transmit buffer is ready, writing four characters to the transmit buffer via the data access registers and then verifying that the characters are ready before finally transmitting them.

Step	Action	Register	Input/Expected Output
1. Plug the camera in and start FlyCap.			
2. Open the Camera Control Dialog and select the Register tab.			
3. Get the current baud rate, character length setting, parity setting and stop bit setting.	Get Register	0x70000	0x060800FF ■ *0x06 = 19200bps* ■ *0x08 = 8bit, no parity, 1 stop* ■ *0xFF = 255 byte buffer*

Copyright ©2011-2012 Point Grey Research Inc.

Step	Action	Register	Input/Expected Output
4. Open a HyperTerminal window and create a new connection, setting the COM Port Settings to match the current camera settings obtained in step 3.			
5. Enable the serial output (transmit).	Set Register	0x70004	0x40000000
6. Verify transmit buffer ready.	Get Register	0x70004	0x40800000
7. Send four (4) characters to the output buffer on the camera.	Set Register	0x70100	0x31323334 ▪ *ASCII = 1234*
8. Verify that the transmit buffer is currently storing 4 bytes worth of characters.	Get Register	0x7000C	0xFF040000 ▪ *0xFF = 255 bytes of buffer space remaining* ▪ *0x04 = 4 bytes currently stored and waiting to be transmitted*
9. Send the characters from the output buffer to the PC's serial port.	Set Register	0x7000C	0xFF040000 ▪ *HyperTerminal should echo the characters "1234"*

To send more than four characters, either:

- Repeat steps 7 through 9 above, and send characters in sets of four using register 0x70100; or
- Do a block write of all the characters using registers 0x70104 – 0x701FF (see the FlyCapture API documentation for information on doing block transfers).

Although both types of writes to the transmit buffer may have to be 32-bit aligned, the number of characters transmitted does not. Subsequent writes to the buffer will simply overwrite characters that were not transmitted during a previous transmit.

The actual transmit buffer size may be larger than that reported in step 3 above. See SIO Buffers on previous page. When this is the case, the "buffer space remaining" that is reported in step 8 will not decrease until the actual buffer space remaining is less than 255 bytes.

4.5.2 Serial Input Transaction (Receiving Data)

A general overview of the steps for a serial input transaction, where the camera is receiving data from a transmitting serial port, is as follows:

1. In RECEIVE_BUFFER_STATUS_CONTROL register 70008h, read the valid data size of current receive buffer *RBUF_ST*.
2. Write the input data length to *RBUF_CNT* field.
3. Read received characters from SIO_DATA_REGISTER 70100h.
4. To input more characters, repeat step 1.

Copyright ©2011-2012 Point Grey Research Inc.

4.5.2.1 Example: Receiving Characters from a PC

This example describes how to send four (4) characters from the PC to the camera's serial port. Microsoft's HyperTerminal program (*Start Menu > All Programs > Accessories > Communications*) is used to send the characters received from the camera. The process detailed by the table below involves the user enabling receive, having characters sent to the camera, checking to insure that the receive buffer is ready to be read, verifying that the characters have arrived and then having them transferred to the data access registers before they are read out.

Step	Action	Register	Input/Expected Output
1. Repeat steps 1 to 4 described in *Example: Transmitting Characters to a PC* (page 52)			
2. Enable the serial input (receive).	Set Register	0x70004	0x80000000
3. Verify no receive data framing errors. (page 54)	Get Register	0x70004	0x80000000 ■ *0x80040000 indicates a receive data framing error, possibly due to a noisy RS-232 line or incorrect baud rate/port settings.* ■ *0x80020000 indicates a receive data parity error*
4. Send four (4) characters to the input buffer on the camera. For test purposes, type the characters "ABCD" in the HyperTerminal window.			By default, characters will not be displayed in the HyperTerminal window. To echo typed characters to the screen, select File > Properties > Settings tab > ASCII Setup…
5. Verify that the receive data buffer is ready to be read.	Get Register	0x70004	0x80200000
6. Verify that the receive buffer is currently storing 4 bytes worth of characters, which are waiting to be read.	Get Register	0x70008	0x04000000
7. Send four (4) characters from the input buffer to the data access register.	Set Register	0x70008	0x00040000
8. Verify that four (4) characters are ready to be read from the data access register.	Get Register	0x70008	0x00040000
9. Read the four (4) characters from the data access register.	Get Register	0x70100	0x41424344 ■ *Assumes input was "ABCD"*

To receive more than four characters, either:

Copyright ©2011-2012 Point Grey Research Inc.

- Repeat steps above, and receive characters in sets of four using register 70100h; or
- Do a block read of all of the characters using registers 0x70104 – 0x701FF. For example, if 12 characters were received (0x70008 = 0x0C000000), Set Register 0x70008 to 0x000C0000 and begin reading the bytes starting at 0x70104 (see the FlyCapture API documentation for information on doing block transfers).

Although both types of reads from the receive buffer may have to be 32-bit aligned, the number of characters received does not. Extra characters read will simply be filled with 0's.

The actual receive buffer size may be larger than that reported in step 3 above. See SIO Buffers on page 52.

4.5.3 Transmitting and Receiving Data Simultaneously

Simultaneous transmitting and receiving of data can be achieved in a manner very similar to that illustrated by the previous two examples. The primary difference is that register 70004h must be set to 0xC0000000 to enable both transmit and receive. Once this has been done transmit and receive transactions can be interleaved as may be required by the application.

4.5.4 Serial Input/Output Registers

This section describes the control and inquiry registers for the serial input/output (SIO) control functionality.



To calculate the base address for an offset CSR:

1. *Query the offset inquiry register.*
2. *Multiple the value by 4. (The value is a 32-bit offset.)*
3. *Remove the 0xF prefix from the result. (i.e., F70000h becomes 70000h)*

Copyright ©2011-2012 Point Grey Research Inc.

Offset	Name	Field	Bit	Description
488h	SIO_CONTROL_CSR_INQ	SIO_Control_Quadlet_Offset	[0-31]	32-bit offset of the SIO CSRs from the base address of initial register space
Base + 0h	SERIAL_MODE_REG	Baud_Rate	[0-7]	*Baud rate setting* Read: Get current baud rate Write: Set baud rate 0: 300 bps 1: 600 bps 2: 1200 bps 3: 2400 bps 4: 4800 bps 5: 9600 bps 6: 19200 bps 7: 38400 bps 8: 57600 bps 9: 115200 bps 10: 230400 bps Other values reserved
		Char_Length	[8-15]	Character length setting Read: Get data length Write: Set data length (must not be 0) 7: 7 bits, 8: 8 bits Other values reserved
		Parity	[16-17]	*Parity setting* Read: Get current parity Write: Set parity 0: None, 1: Odd, 2: Even
		Stop_Bit	[18-19]	*Stop bits* Read: Get current stop bit Write: Set stop bit 0: 1, 1: 1.5, 2: 2
			[20-23]	Reserved
		Buffer_Size_Inq	[24-31]	*Buffer Size (Read-Only)* This field indicates the maximum size of the receive/transmit data buffer. See also SIO Buffers on page 52 If this value=1, *Buffer_Status_Control* and *SIO_Data_Register* characters 1-3 should be ignored.

Copyright ©2011-2012 Point Grey Research Inc.

Offset	Name	Field	Bit	Description
Base + 4h	SERIAL_ CONTROL_REG	RE	[0]	Receive enable Indicates if the camera's ability to receive data has been enabled. Enabling this register causes the receive capability to be immediately started. Disabling this register causes the data in the buffer to be flushed. Read: Current status Write: 0 Disable, 1: Enable
		TE	[1]	*Transmit enable* Indicates if the camera's ability to transmit data has been enabled. Enabling this register causes the transmit capability to be immediately started. Disabling this register causes data transmission to stop immediately, and any pending data is discarded. Read: Current status Write: 0: Disable, 1: Enable
		-	[2-7]	Reserved
	SERIAL_ STATUS_REG	TDRD	[8]	*Transmit data buffer ready (read only)* Indicates if the transmit buffer is ready to receive data from the user. It will be in the Ready state as long as *TBUF_ST* != 0 and *TE* is enabled. Read only 0: Not ready, 1: Ready
		-	[9]	Reserved
		RDRD	[10]	*Receive data buffer ready (read only)* Indicates if the receive buffer is ready to be read by the user. It will be in the Ready state as long as *RBUF_ST* != 0 and *RE* is enabled. Read only 0: Not ready, 1: Ready
		-	[11]	Reserved
		ORER	[12]	*Receive buffer over run error* Read: Current status Write: 0: Clear flag, 1: Ignored
		FER	[13]	*Receive data framing error* Read: Current status Write: 0: Clear flag, 1: Ignored
		PER	[14]	*Receive data parity error* Read: Current status Write: 0: Clear flag, 1: Ignored
		-	[15-31]	Reserved

Copyright ©2011-2012 Point Grey Research Inc.

Offset	Name	Field	Bit	Description
Base + 8h	RECEIVE_ BUFFER_ STATUS_ CONTROL	RBUF_ST	[0-8]	*SIO receive buffer status* Indicates the number of bytes that have arrived at the camera but have yet to be queued to be read. Read: Valid data size of current receive buffer Write: Ignored
		RBUF_CNT	[8-15]	*SIO receive buffer control* Indicates the number of bytes that are ready to be read. Read: Remaining data size for read Write: Set input data size
		-	[16-31]	Reserved
Base + Ch	TRANSMIT_ BUFFER_ STATUS_ CONTROL	TBUF_ST	[0-8]	*SIO output buffer status* Indicates the minimum number of free bytes available to be filled in the transmit buffer. It will count down as bytes are written to any of the SIO_DATA_REGISTERs starting at 2100h. It will count up as bytes are actually transmitted after a write to *TBUF_CNT*. Although its maximum value is 255, the actual amount of available buffer space may be larger. Read: Available data space of transmit buffer Write: Ignored
		TBUF_CNT	[8-15]	*SIO output buffer control* Indicates the number of bytes that have been stored since it was last written to. Writing any value to *TBUF_CNT* will cause it to go to 0. Writing a number less than its value will cause that many bytes to be transmitted and the rest thrown away. Writing a number greater than its value will cause that many bytes to be written - its value being valid and the remainder being padding. Read: Written data size to buffer Write: Set output data size for transmit.
		-	[16-31]	Reserved
Base + 100h	SIO_DATA_ REGISTER	Char_0	[0-7]	*Character_0* Read: Read character from receive buffer. Padding data if data is not available. Write: Write character to transmit buffer. Padding data if data is invalid.
		Char_1	[8-16]	*Character_1* Read: Read character from receive buffer+1. Padding data if data is not available. Write: Write character to transmit buffer+1. Padding data if data is invalid.

Copyright ©2011-2012 Point Grey Research Inc.

Offset	Name	Field	Bit	Description
		Char_2	[17-23]	*Character_2* Read: Read character from receive buffer+2. Padding data if data is not available. Write: Write character to transmit buffer+2. Padding data if data is invalid.
		Char_3	[24-31]	*Character_3* Read: Read character from receive buffer+3. Padding data if data is not available. Write: Write character to transmit buffer+3. Padding data if data is invalid.
Base + 104h : Base + 1FFh	SIO_DATA_ REGISTER_ALIAS		[0-31]	Alias SIO_Data_Register area for block transfer.

4.6 GPIO Electrical Characteristics

Opto-isolated **input** pins require an external pull up resistor to allow triggering of the camera by shorting the pin to the corresponding opto ground (OPTO_GND). Non opto-isolated input pins are internally pulled high using weak pull-up resistors to allow triggering by shorting the pin to GND. Inputs can also be directly driven from a 3.3 V or 5 V logic output.

The inputs are protected from over voltage.

When configured as **outputs**, each line can sink 10 mA of current. To drive external devices that require more, consult Knowledge Base Article 200 for information on buffering an output signal using an optocoupler.

The V_{EXT} pin (Pin 7) allows the camera to be powered externally. The voltage limit is 5-24 V, and current is limited to 1 A.

The **+3.3V** pin is fused at 150 mA. External devices connected to Pin 8 should not attempt to pull anything greater than that.



To avoid damage, connect the OPTO_GND pin first before applying voltage to the GPIO line.

4.6.1 GPIO0 (Opto-Isolated Input) Circuit

The figure below shows the schematic for the opto-isolated input circuit.

Copyright ©2011-2012 Point Grey Research Inc.

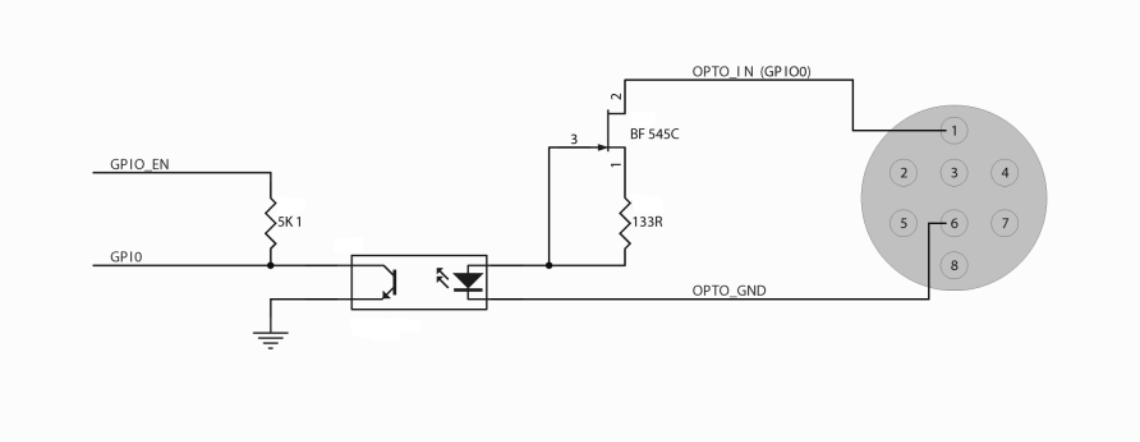


Figure 4.1: Optical input circuit

- Logical 0 input voltage: 0 VDC to +1 VDC (voltage at OPTO_IN)
- Logical 1 input voltage: +1.5 VDC to +24 VDC (voltage at OPTO_IN)
- Maximum input current: 8.3 mA
- Behavior between 1 VDC and 1.5 VDC is undefined and input voltages between those values should be avoided
- Input delay time: 4 µs

4.6.2 GPIO1 (Opto-Isolated Output) Circuit

The figure below shows the schematic for the opto-isolated output circuit. The maximum current allowed through the opto-isolated output circuit is 25 mA.

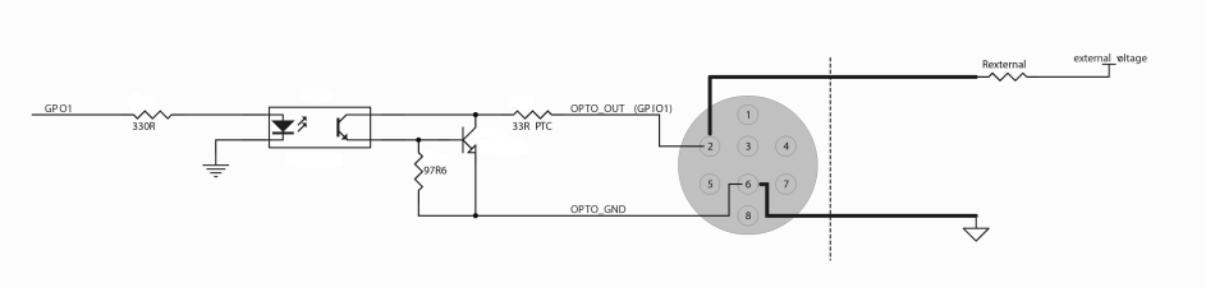


Figure 4.2: Optical output circuit

The following table lists the switching times for the opto-isolator in the output pin, assuming an output VCC of 5 V and a 1 kΩ resistor.

Parameter	Value
Delay Time	9 µs
Rise Time	16.8 µs
Storage Time	0.52 µs
Fall Time	2.92 µs

Copyright ©2011-2012 Point Grey Research Inc.

The following table lists several external voltage and resistor combinations that have been tested to work with the opto-isolated output.

External Voltage	External Resistor	OPTO_OUT Voltage	OPTO_OUT Current
3.3 V	1 kΩ	0.56 V	2.7 mA
5 V	1 kΩ	0.84 V	4.2 mA
12 V	2.4 kΩ	0.91 V	4.6 mA
24 V	4.7 kΩ	1.07 V	5.1 mA

4.6.3 GPIO 2/3 (Bi-Directional) Circuit

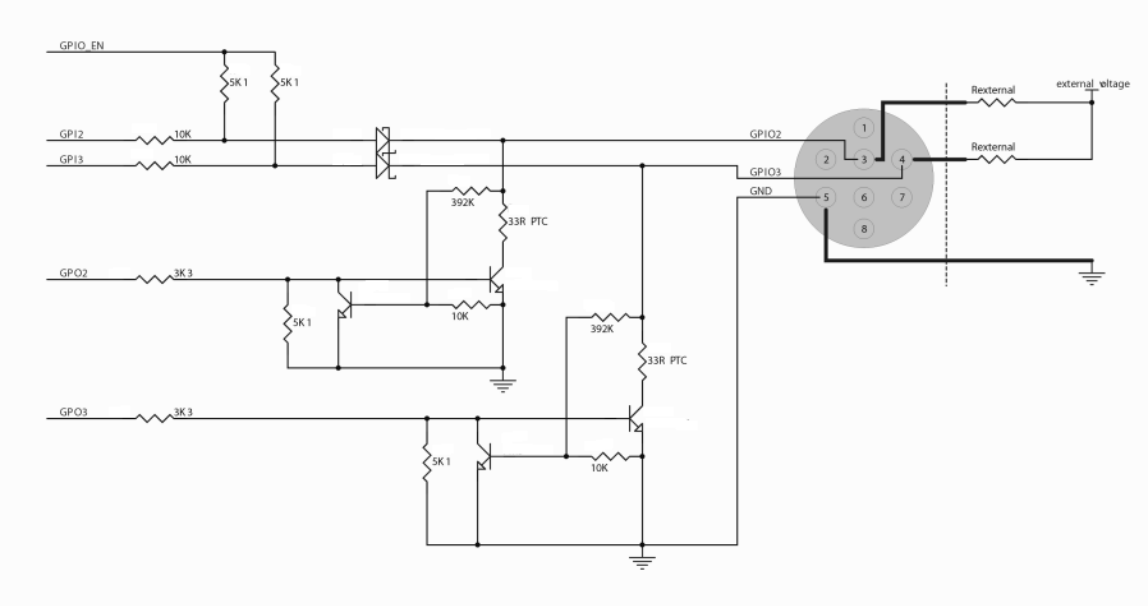


Figure 4.3: GPIO2/3 Circuit

Input Side

- Logical 0 input voltage: 0 VDC to +0.5 VDC (voltage at GPIO2/3)
- Logical 1 input voltage: +1.5 VDC to +24 VDC (voltage at GPIO2/3)
- Behavior between 0.5 VDC and 1.5 VDC is undefined and input voltages between those values should be avoided

To avoid damage, connect the ground (GND) pin first before applying voltage to the GPIO line.

Output Side

The maximum output current allowed through the bi-directional circuit is 25 mA (limit by PTC resistor), and the output impedance is 40 Ω.

The following table lists several external voltage and resistor combinations that have been tested to work with the bi-directional GPIO when configured as output.

Copyright ©2011-2012 Point Grey Research Inc.

External Voltage	External Resistor ($R_{external}$)	GPIO2/3 Voltage
3.3 V	1 kΩ	0.157 V
5 V	1 kΩ	0.218 V
12 V	1 kΩ	0.46 V
24 V	1 kΩ	0.86 V

The following table lists the switching times for a standard GPIO pin, assuming an output VCC of 5V and a 1 kΩ resistor.

Parameter	Value
Delay Time	0.28 µs
Rise Time	0.06 µs
Storage Time	0.03 µs
Fall Time	0.016 µs

Copyright ©2011-2012 Point Grey Research Inc.

5 Video Formats, Modes and Frame Rates

5.1 Video Modes Overview

The camera implements a number of Format 7 customizable video modes. These modes, which may increase frame rate and image intensity, operate by selecting a specific region of interest (ROI) of the image, or by configuring the camera to aggregate pixel values using a process known as "binning." Some modes implement a combination of ROI and binning.

On Point Grey cameras, binning refers to the aggregation of pixels. Analog binning is aggregation that occurs before the analog to digital conversion. Digital binning is aggregation that occurs after the analog to digital conversion. Unless specified otherwise, color data is maintained in binning modes.

On FL3-U3-32S2 models, no frame rate increase is achieved through binning. A frame rate increase may be achieved by reducing ROI, depending on Format 7 mode. For more information, see Format 7 Mode Descriptions (page 64).

The figures below illustrate how binning works. 2x vertical binning aggregates two adjacent vertical pixel values to form a single pixel value. 2x horizontal binning works in the same manner, except two adjacent horizontal pixel values are aggregated.

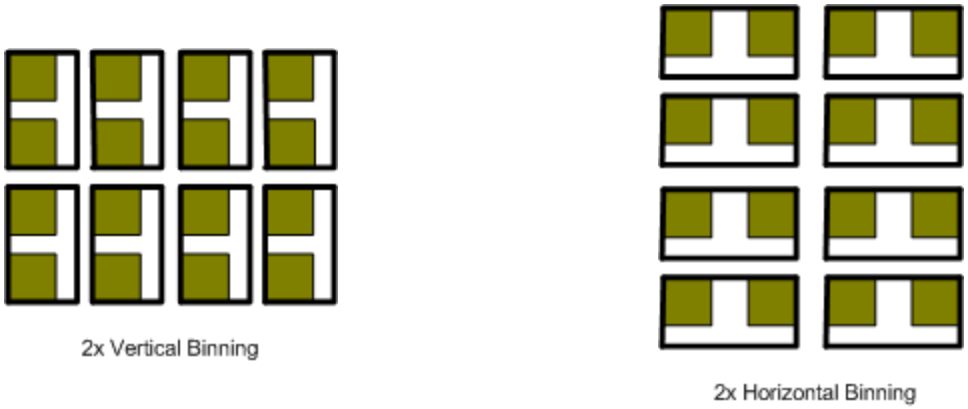


Figure 5.1: 2x Vertical and 2x Horizontal Binning

In most cases, pixels are added once they are binned. Additive binning usually results in increased image intensity. Another method is to average the pixel values after aggregation. Binning plus averaging results in little or no change in the overall image intensity.

Moving the ROI position to a different location does not require the camera to be stopped (isochronous transmission disabled) and restarted (iso enabled), unless the change is illegal (e.g. moving the ROI outside the imaging area).

Changing the position or size of the ROI requires approximately one frame time to implement. Changing the Format 7 mode requires up to approximately three frame times to implement.

Copyright ©2011-2012 Point Grey Research Inc.

Additional binning information can be obtained by reading the FORMAT_7_RESIZE_INQ (page 144) register 0x1AC8. The implementation of Format 7 modes and the frame rates that are possible are not specified by the IIDC, and are subject to change across firmware versions.

For information about configuring the camera in Format 7 mode, see Video Format, Mode, and Frame Rate Settings on page 76.

For information about configuring Format 7 modes/sizes and Format 7-related inquiry registers, see Supported Formats, Modes and Frame Rates on page 69.



When operating in Format 7 mode, the Feature_ Lo_Inq register 408h reports the presence of the Pan and Tilt features. However, these feature are off and cannot be turned on.



Pixel correction (page 127) is not done in any of the binning modes.

5.1.1 Video Mode Descriptions

Mode	Models	Description	Frame Rate Increase	Brightness Increase	SNR Improved
0	All	ROI	No	No	No
1	FL3-U3-13S2M FL3-U3-13E4M FL3-U3-32S2M	2X/2X Additive Binning	No	Yes	No
	FL3-U3-13E4C		Yes	Yes	No
	FL3-U3-13Y3M	2X/2X Subsampling	Yes	No	No
2	FL3-U3-13E4C FL3-U3-13E4M	2X/2X Subsampling	Yes	No	No
4	FL3-U3-13S2C FL3-U3-32S2C FL3-U3-88S2C	2X/2X On sensor Binning	No	Yes	Yes
7	FL3-U3-13S2C FL3-U3-13S2M FL3-U3-32S2C FL3-U3-32S2M	Output 12 bits Extended shutter	No	No	No
	FL3-U3-13E4C FL3-U3-13E4M	Rolling Shutter	No	No	Yes
8	FL3-U3-13S2C FL3-U3-13S2M FL3-U3-32S2C FL3-U3-32S2M	Smaller fields at faster frame rate	No	No	No
10	FL3-U3-88S2C	4000 x 3000 (12 MP) resolution at 15 FPS	No	No	No

Copyright ©2011-2012 Point Grey Research Inc.

Mode 0

Mode 0 allows only for specifying a region of interest, and does not perform any binning. Frame rate does not increase when ROI size is reduced.

Mode 1

Mode 1 implements a combination of 2X horizontal and 2X vertical additive binning. This mode results in a resolution that is both half the width and half the height of the original image.

For the FL3-U3-13S2, FL3-U3-13E4, and FL3-U3-32S2 mono models, mode 1 may result in an increase in brightness and improved signal-to-noise ratio. Frame rate does increase.

For the FL3-U3-13E4 color model, frame rate and brightness increase but there is no improvement to signal-to-noise ratio.

Mode 1 (FL3-U3-13Y3M)

For the FL3-U3-13Y3M, mode 1 implements a combination of 2X horizontal and 2X vertical subsampling. This mode results in a resolution that is both half the width and half the height of the original image.

Frame rate increases, but there is no increase in brightness nor improvement to signal-to-noise ratio.

Mode 2

Mode 2 implements a combination of 2X horizontal and 2X vertical subsampling. It results in a faster frame rate, but there is no increase in brightness or improvement to signal-to-noise ratio.

Mode 4

Mode 4 implements a combination of 2X horizontal and 2X vertical binning. Both horizontal and vertical binning are performed on the sensor, prior to color processing. It results in an increase in image intensity by a factor of four, and improved signal-to-noise ratio.

Mode 7

Mode 7 allows only for specifying a region of interest, and does not perform any binning. This mode uses a slower pixel clock, and is recommended for longer extended shutter times (FL3-U3-13S2 to 1 second and FL3-U3-32S2 to 32 seconds). Frame rate does not increase when ROI size is reduced. Mode 7 output is in 12 bits.

Mode 7 (FL3-U3-13E4)

For the FL3-U3-13E4 mono and color cameras, mode 7 enables a rolling shutter. There is no increase in frame rate or brightness, but signal-to-noise ratio may be improved.

Mode 8

Mode 8 is a region of interest mode, with no binning, and is recommended for smaller fields of vision at faster frame rates. On FL3-U3-13S2 models, the maximum size of the ROI is 688 x 504. The width must be a multiple of 16. The ROI can change position within the entire 2080 x 1552 pixel array. The maximum frame rate stays constant regardless of the ROI size.

Copyright ©2011-2012 Point Grey Research Inc.

On FL3-U3-32S2 models, the ROI size can range from 16 to 2080 pixels wide and 2 to 1080 pixels high, making the minimum image size 16 x 2 and the maximum size 2080 x 1080. The ROI can change position within the entire 2080 x 1552 pixel array.



Specifying an image size outside the allowable parameters of the Mode 8 cut-out returns an error from register VALUE_SETTING: 07Ch (page 148).

The first two frames following a change in the size or position of the Mode 8 cut-out are invalid.

Mode 10 (FL3-U3-88S2)

For FL3-U3-88S2, mode 10 allows a maximum image size of 4000 x 3000 (12 MP) with a maximum frame rate of 15 FPS. There is no pixel correction (page 127) in mode 10. Only 8-bit and 12-bit pixel formats support 12 MP; 16-bit pixel formats support 11 MP and 24-bit pixel formats support 7.4 MP.

5.1.2 Calculating Format 7 Frame Rates

The theoretical frame rate (FPS) that can be achieved given the number of packets per frame (PPF) can be calculated as follows:

FPS = 1 / (Packets per Frame * 125us)

An estimate for the number of packets per frame can be determined according to the following:

PPF = (Image_Size * Bytes_Per_Pixel) / Bytes_Per_Packet

For the exact number of packets per frame, query the PACKET_PER_FRAME_INQ register. For the number of bytes per packet, query the BYTE_PER_PACKET register.

For example, assuming an image size of 1032x776, pixel format of Mono16 (2 bytes per pixel), and 3880 bytes per packet, the calculation would be as follows:

FPS = 1 / ((1032*776*2 / 3880) * 0.000125)

FPS = 1 / (412.8 * 0.000125)

FPS = 19.38

5.2 Pixel Formats

Pixel formats are an encoding scheme by which color or monochrome images are produced from raw image data. Most pixel formats are numbered 8, 12, or 16 to represent the number of bits per pixel.

The camera's ADC (page 12), which digitizes the images , is configured to a fixed bit output. If the pixel format selected has fewer bits per pixel than the ADC output, the least significant bits are dropped. If the pixel format selected has greater bits per pixel than the ADC output, the least significant bits are padded with zeros.

Copyright ©2011-2012 Point Grey Research Inc.

Pixel Format	Bits per Pixel
Mono 8, Raw 8	8
Mono 12, Raw 12, YUV 411	12
Mono 16, Raw 16, YUV 422	16
RGB 8, YUV 444	24

5.2.1 Raw

Raw is a pixel format where image data is Bayer RAW untouched by any on board processing. Selecting a Raw format bypasses the FPGA/color core which disables image processing, such as gamma/LUT and color encoding, but allows for faster frame rates.

5.2.2 Mono

Mono is a pixel format where image data is monochrome. Color cameras using a mono format enable FPGA/color core image processing such as access to gamma/LUT.

Y8 and Y16 are also monochrome formats with 8 and 16 bits per pixel respectively.

5.2.3 RGB

RGB is a color-encoding scheme that represents the intensities of red, green, and blue channels in each pixel. Each color channel uses 8 bits of data. With 3 color channels, a single RGB pixel is 24 bits.

5.2.4 YUV

YUV is a color-encoding scheme that assigns both brightness (Y) and color (UV) values to each pixel. Each Y, U, and V value comprises 8 bits of data. Data transmission can be in 24, 16, or 12 bits per pixel. For 16 and 12 bits per pixel transmissions, the U and V values are shared between pixels to free bandwidth and possibly increase frame rate.

YUV444 is considered a high resolution format which transmits 24 bits per pixel. Each Y, U, and V value has 8 bits.

YUV422 is considered a medium resolution format which transmits 16 bits per pixel. Each Y value has 8 bits, but the U and V values are shared between 2 pixels. This reduces the bandwidth of an uncompressed video signal by one-third with little to no visual difference.

YUV411 is considered a low resolution format which transmits 12 bits per pixel. Each Y value has 8 bits, but the U and V values are shared between 4 pixels. The reduces bandwidth by one half compared to YUV444, but also reduces the color information being recorded.

YUV can be either packed or planar. Packed is when the Y, U, and V components are stored in a single array (macropixel). Planar is when the Y, U, and V components are stored separately and then combined to form the image. Point Grey cameras use packed YUV.

Copyright ©2011-2012 Point Grey Research Inc.

Related Knowledge Base Articles

Title	Article
Understanding YUV data formats	Knowledge Base Article 313

5.2.5 Y16 (16-bit Mono) Image Acquisition

The camera can output Y16 (16 bits-per-pixel) mono images. Because the camera's A/D converter is less than 16 bits, unused bits are zero.

Related Knowledge Base Articles

Title	Article
Method for converting signal-to-noise ratio (SNR) to/from bits of data	Knowledge Base Article 170

The PGM file format can be used to correctly save 16-bit images. Although the availability of photo manipulation/display applications that can correctly display true 16-bit images is limited, XV in Linux and Adobe Photoshop are two possibilities.

5.2.5.1 DATA_DEPTH: 630h

This register allows the user to control the endianness of Y16 images.

Format:

Field	Bit	Description
Data_Depth	[0-7]	Effective data depth of current image data. If read value of Data_Depth is zero, shall ignore this field. Read: Effective data depth Write: Ignored
Little_Endian	[8]	Little endian mode for 16-bit pixel formats only Write/Read: 0: Big endian mode (default on initialization) 1: Little endian mode
	[9-31	Reserved

5.2.6 Y8 or Y16 Raw Bayer Output

When operating in Y8 or Y16 mode, color models can output either grayscale or raw Bayer data.



Selecting a half-width, half-height image size and monochrome pixel format, such as 800x600 Y8, using a non-Format 7 mode provides a monochrome binned image. In some cases, enabling raw Bayer output in mono mode provides a raw Bayer region of interest of 800x600, centered within the larger pixel array. This has an effect on the field of view.

5.2.6.1 BAYER_MONO_CTRL: 1050h

This register enables raw Bayer output in non-Format 7 Y8/Y16 modes, or Format 7 Mono8/Mono16 modes.

Copyright ©2011-2012 Point Grey Research Inc.

Format:

Field	Bit	Description
Presence_Inq	[0]	Presence of this feature. 0: Not Available, 1: Available
	[1-30]	Reserved.
Bayer_Mono_Ctrl	[31]	Value 0: Disable raw Bayer output in mono modes, 1: Enable raw Bayer output in mono modes

5.3 Supported Formats, Modes and Frame Rates

The tables on the following pages show the supported pixel formats and mode combinations, along with achievable frame rates at varying resolutions, for each camera model.

5.3.1 FL3-U3-13S2 Video Modes

5.3.1.1 FL3-U3-13S2 Standard Formats, Modes and Frame Rates

Models: ● 13S2M ● 13S2C						
Modes	**3.75 FPS**	**7.5 FPS**	**15 FPS**	**30 FPS**	**60 FPS**	**120 FPS**
1280 x 960 YUV422	●	● (default)	●	●	●	
1280 x 960 RGB	●	●	●	●		
1280 x 960 Y8	● ●	● ●	● (default) ●	● ●	● ●	● ●
1280 x 960 Y16	● ●	● ●	● ●	● ●	● ●	

5.3.1.2 FL3-U3-13S2 Custom Formats, Modes and Frame Rates

For FL3-U3-13S2 in Format 7 modes the image width must be a multiple of 16.

Many USB 3.0 PCI Express Gen 2.0 motherboards limit data rates to ~180 MByte/s. The FlyCap2 Camera Selection dialog shows the supported PCIe bus speed. If you select a video format/mode that requires data rates above what is supported, the camera will skip images.

For example: 1920 x 1080, 60 FPS, YUV422 = ~248 MB/s

Table 5.1: FL3-U3-13S2M Custom Formats, Modes and Frame Rates

Mode 0

Pixel Format	1328 x 1048	1280 x 960	640 x 480	320 x 240	160 x 120
8-bit (Mono)	120	120	120	120	120
12-bit (Mono)	97	109	120	120	120
16-bit (Mono, Raw)	73	81	120	120	120

Copyright ©2011-2012 Point Grey Research Inc.

Mode 1

Pixel Format	656 x 524	640 x 480	320 x 240	160 x 120
All Formats	120	120	120	120

Mode 7

Pixel Format	1328 x 1048	1280 x 960	640 x 480	320 x 240	160 x 120
All Formats	60	60	60	60	60

Mode 8

Pixel Format	688 x 504	640 x 480	320 x 240	160 x 120
All Formats	243	243	243	243
In mode 8, the maximum size of the ROI is 688 x 504. The width must be a multiple of 16.				

Images acquired by color cameras using Mono8, Mono12 or Mono16 modes are converted to greyscale on the camera. Users interested in accessing the raw Bayer data to apply their own color conversion algorithm or one of the FlyCapture library algorithms should refer to *Accessing Raw Bayer Data on page 117**.*

Table 5.2: FL3-U3-13S2C Custom Formats, Modes and Frame Rates

Mode 0

Pixel Format	1328 x 1048	1280 x 960	640 x 480	320 x 240	160 x 120
8-bit (Mono, Raw)	120	120	120	120	120
12-bit (Mono, Raw, YUV411)	97	109	120	120	120
16-bit (Mono, Raw, YUV422)	73	81	120	120	120
24-bit (YUV444, RGB)	47	55	120	120	120

Mode 4

Pixel Format	656 x 524	640 x 480	320 x 240	160 x 120
All Formats	120	120	120	120

Mode 7

Pixel Format	1328 x 1048	1280 x 960	640 x 480	320 x 240	160 x 120
8-, 12-, 16-bit (Mono, Raw, YUV411, YUV422)	60	60	60	60	60
24-bit (YUV444, RGB)	48	55	60	60	60

Mode 8

Pixel Format	688 x 504	640 x 480	320 x 240	160 x 120
All Formats	243	243	243	243
In mode 8, the maximum size of the ROI is 688 x 504. The width must be a multiple of 16.				

Copyright ©2011-2012 Point Grey Research Inc.

5.3.2 FL3-U3-13Y3 Video Modes

5.3.2.1 FL3-U3-13Y3 Standard Formats, Modes and Frame Rates

Modes	15 FPS	30 FPS	60 FPS
1280 x 960 Y8	●	●	●
1280 x 960 Y16	●	●	●
Modes default to highest frame rate			

5.3.2.2 FL3-U3-13Y3 Custom Formats, Modes and Frame Rates

Many USB 3.0 PCI Express Gen 2.0 motherboards limit data rates to ~180 MByte/s. The FlyCap2 Camera Selection dialog shows the supported PCIe bus speed. If you select a video format/mode that requires data rates above what is supported, the camera will skip images.

For example: 1920 x 1080, 60 FPS, YUV422 = ~248 MB/s

Table 5.3: FL3-U3-13Y3M Custom Formats, Modes and Frame Rates

Mode 0

Pixel Format	1280 x 1024	1280 x 960	640 x 480	320 x 240	160 x 120
8-bit (Raw)	150	157	301	284	284
16-bit (Raw)	71	77	296	284	284
8-, 12-bit (Mono)	89	95	186	350	350
16-bit (Mono)	71	77	186	350	350

Mode 1

Pixel Format	640 x 512	640 x 480	320 x 240	160 x 120
8-bit (Raw)	430	450	450	450
16-bit (Raw)	230	310	440	440
8-, 12-, 16-bit (Mono)	230	230	230	230

Choosing a Mono pixel format enables FPGA processing, i.e., Gamma/Lookup Table, but limits the frame rate. Choosing a Raw pixel format disables FPGA processing, but increases the frame rate.

Copyright ©2011-2012 Point Grey Research Inc.

5.3.3 FL3-U3-13E4 Video Modes

5.3.3.1 FL3-U3-13E4 Standard Formats, Modes and Frame Rates

Models: ● 13E4M ● 13E4C						
Modes	**1.875 FPS**	**3.75 FPS**	**7.5 FPS**	**15 FPS**	**30 FPS**	**60 FPS**
1280 x 960 YUV422	●	●	●	●	●	●
1280 x 960 RGB	●	●	●	●	●	
1280 x 960 Y8	●	● ●	● ●	● ●	● ●	● ●
1280 x 960 Y16	● ●	● ●	● ●	● ●	● ●	● ●
Modes default to highest frame rate.						

5.3.3.2 FL3-U3-13E4 Custom Formats, Modes and Frame Rates

Many USB 3.0 PCI Express Gen 2.0 motherboards limit data rates to ~180 MByte/s. The FlyCap2 Camera Selection dialog shows the supported PCIe bus speed. If you select a video format/mode that requires data rates above what is supported, the camera will skip images.

For example: 1920 x 1080, 60 FPS, YUV422 = ~248 MB/s

Table 5.4: FL3-U3-13E4M Custom Formats, Modes and Frame Rates

Mode 0

Pixel Format	1280 x 1024	1280 x 960	640 x 480	320 x 240	160 x 120
All Formats	60	64	124	230	410

Mode 1

Pixel Format	640 x 512	640 x 480	320 x 240	160 x 120
All Formats	60	60	60	60

Mode 2

Pixel Format	640 x 512	640 x 480	320 x 240	160 x 120
All Formats	118	118	118	118

Mode 7

Pixel Format	1280 x 1024	1280 x 960	640 x 480	320 x 240	160 x 120
All Formats	60	60	60	60	60

Images acquired by color cameras using Mono8, Mono12 or Mono16 modes are converted to greyscale on the camera. Users interested in accessing the raw Bayer data to apply their own color conversion algorithm or one of the FlyCapture library algorithms should refer to *Accessing Raw Bayer Data on page 117**.*

Copyright ©2011-2012 Point Grey Research Inc.

Table 5.5: FL3-U3-13E4C Custom Formats, Modes and Frame Rates

Mode 0

Pixel Format	1280 x 1024	1280 x 960	640 x 480	320 x 240	160 x 120
8-bit (Mono, Raw)	40	43	124	234	419
12-bit (Mono, Raw, YUV411)	26	28	114	234	419
16-bit (Mono, Raw, YUV422)	20	21	86	234	419
24-bit (YUV444, RGB)	13	14	57	229	419

Mode 1

Pixel Format	640 x 512	640 x 480	320 x 240	160 x 120
8-, 12-, 16-bit (Mono, Raw, YUV411, YUV422)	60	60	60	60
24-bit (YUV444, RGB)	53	57	60	60

Mode 2

Pixel Format	640 x 512	640 x 480	320 x 240	160 x 120
8-bit (Mono, Raw)	119	119	119	119
12-bit (Mono, Raw, YUV411)	108	114	119	119
16-bit (Mono, Raw, YUV422)	81	86	119	119
24-bit (YUV444, RGB)	53	57	119	119

Mode 7

Pixel Format	1280 x 1024	1280 x 960	640 x 480	320 x 240	160 x 120
8-bit (Mono, Raw)	40	43	60	60	60
12-bit (Mono, Raw, YUV411)	26	28	60	60	60
16-bit (Mono, Raw, YUV422)	20	21	60	60	60
24-bit (YUV444, RGB)	13	14	57	60	60

5.3.4 FL3-U3-32S2 Video Modes

5.3.4.1 FL3-U3-32S2 Standard Formats, Modes and Frame Rates

Models: ● 32S2M ● 32S2C						
Modes	**1.875 FPS**	**3.75 FPS**	**7.5 FPS**	**15 FPS**	**30 FPS**	**60 FPS**
1600 x 1200 YUV422	●	●	●	●	● (default)	
1600 x 1200 RGB8	●	●	●	●		
1600 x 1200 Y8	● ●	● ●	● ●	● ●	● (default) ●	● ●
1600 x 1200 Y16	● ●	● ●	● ●	● ●		

Copyright ©2011-2012 Point Grey Research Inc.

5.3.4.2 FL3-U3-32S2 Custom Formats, Modes and Frame Rates

Many USB 3.0 PCI Express Gen 2.0 motherboards limit data rates to ~180 MByte/s. The FlyCap2 Camera Selection dialog shows the supported PCIe bus speed. If you select a video format/mode that requires data rates above what is supported, the camera will skip images.

For example: 1920 x 1080, 60 FPS, YUV422 = ~248 MB/s

Table 5.6: FL3-U3-32S2M Custom Formats, Modes and Frame Rates

Mode 0

Pixel Format	2080 x 1552	1600 x 1200	1280 x 960	640 x 480	320 x 240	160 x 120
8-bit (Mono)	60	60	60	60	60	60
12-bit (Mono)	42	60	60	60	60	60
16-bit (Mono, Raw)	31	52	60	60	60	60

Mode 1

Pixel Format	1040 x 776	640 x 480	320 x 240	160 x 120
All Formats	60	60	60	60

Mode 7

Pixel Format	2080 x 1552	1600 x 1200	1280 x 960	640 x 480	320 x 240	160 x 120
All Formats	15	15	15	15	15	15

Mode 8

Pixel Format	2080 x 1080	1280 x 960	640 x 480	320 x 240	160 x 120
8-bit (Mono)	86	97	182	182	182
12-bit (Mono)	60	97	182	182	182
16-bit (Mono, Raw)	45	82	182	182	182
In mode 8, the ROI size can range from 16 to 2080 pixels wide and 2 to 1080 pixels high, making the minimum image size 16 x 2 and the maximum size 2080 x 1080					

Images acquired by color cameras using Mono8, Mono12 or Mono16 modes are converted to greyscale on the camera. Users interested in accessing the raw Bayer data to apply their own color conversion algorithm or one of the FlyCapture library algorithms should refer to *Accessing Raw Bayer Data on page 117**.*

Table 5.7: FL3-U3-32S2C Custom Formats, Modes and Frame Rates

Mode 0

Pixel Format	2080 x 1552	1600 x 1200	1280 x 960	640 x 480	320 x 240	160 x 120
8-bit (Mono, Raw)	60	60	60	60	60	60
12-bit (Mono, Raw, YUV411)	37	60	60	60	60	60
16-bit (Mono, Raw, YUV422)	31	52	60	60	60	60
24-bit (YUV444, RGB)	20	34	55	60	60	60

Mode 4

Pixel Format	1040 x 776	640 x 480	320 x 240	160 x 120
All Formats	60	60	60	60

Copyright ©2011-2012 Point Grey Research Inc.

Mode 7

Pixel Format	2080 x 1552	1600 x 1200	1280 x 960	640 x 480	320 x 240	160 x 120
All Formats	15	15	15	15	15	15

Mode 8

Pixel Format	2080 x 1080	1280 x 960	640 x 480	320 x 240	160 x 120
8-bit (Mono, Raw)	86	97	182	182	182
12-bit (Mono, Raw, YUV411)	60	97	182	182	182
16-bit (Mono, Raw, YUV422)	45	81	182	182	182
24-bit (YUV444, RGB)	29	55	182	182	182
In mode 8, the ROI size can range from 16 to 2080 pixels wide and 2 to 1080 pixels high, making the minimum image size 16 x 2 and the maximum size 2080 x 1080					

5.3.5 FL3-U3-88S2 Video Modes

5.3.5.1 FL3-U3-88S2C Standard Formats, Modes and Frame Rates

Modes	1.875 FPS	3.75 FPS	7.5 FPS	15 FPS
1600 x 1200 YUV422	●	●	●	●
1600 x 1200 RGB	●	●	●	●
1600 x 1200 Y8	●	●	●	●
1600 x 1200 Y16	●	●	●	●
Modes default to highest frame rate				

5.3.5.2 FL3-U3-88S2C Custom Formats, Modes and Frame Rates

Many USB 3.0 PCI Express Gen 2.0 motherboards limit data rates to ~180 MByte/s. The FlyCap2 Camera Selection dialog shows the supported PCIe bus speed. If you select a video format/mode that requires data rates above what is supported, the camera will skip images.

For example: 1920 x 1080, 60 FPS, YUV422 = ~248 MB/s

Images acquired by color cameras using Mono8, Mono12 or Mono16 modes are converted to greyscale on the camera. Users interested in accessing the raw Bayer data to apply their own color conversion algorithm or one of the FlyCapture library algorithms should refer to Accessing Raw Bayer Data on page 117.

Table 5.8: FL3-U3-88S2C Custom Formats, Modes and Frame Rates

Mode 0

Pixel Format	4096 x 2160	1600 x 1200	1280 x 960	640 x 480	320 x 240	160 x 120
8-bit (Mono, Raw)	22	22	28	28	28	28
12-bit (Mono, Raw, YUV411)	16	28	28	28	28	28

Copyright ©2011-2012 Point Grey Research Inc.

Mode 0

Pixel Format	4096 x 2160	1600 x 1200	1280 x 960	640 x 480	320 x 240	160 x 120
16-bit (Mono, Raw, YUV422)	12	28	28	28	28	28
24-bit (RGB, YUV444)	9*	28	28	28	28	28
*In Mode 0 24-bit, the FL3-U3-88S2C supports a maximum size of 7.5 MP (for example, 3440 x 2160 or 4096 x 1820)						

Mode 4

Pixel Format	2048 x 1080	1280 x 960	640 x 480	320 x 240	160 x 120
8-, 12-bit (Mono, Raw, YUV411)	60	60	60	60	60
16-bit (Mono, Raw, YUV422)	46	60	60	60	60
24-bit (RGB, YUV444)	28	55	60	60	60

Mode 10

Pixel Format	4000 x 3000	4000 x 2750	4000 x 1860	1280 x 960	640 x 480	320 x 240	160 x 120
8-, 12-bit (Mono, Raw)	15	15	15	19	19	19	19
12-bit (Mono, Raw, YUV411)	11	13	13	19	19	19	19
16-bit (Mono, Raw, YUV422)	N/A	10*	13	19	19	19	19
24-bit (RGB, YUV444)	N/A	N/A	8.5**	19	19	19	19
*In Mode 10 16-bit, the FL3-U3-88S2C supports a maximum size of 11 MP (for example, 4000 x 2750 or 3666 x 3000) **In Mode 10 24-bit, the FL3-U3-88S2C supports a maximum size of 7.4 MP (for example, 4000 x 1860 or 2480 x 3000)							

5.4 Video Format, Mode, and Frame Rate Settings

The following settings control the video format and mode of the camera.

Frame Rate—This provides control over the frame rate of the camera. When this feature is in auto mode, exposure time is limited by the frame rate value dynamically, which is determined by the Current Frame Rate. When this feature is in manual mode, the actual frame interval (time between individual image acquisitions) is fixed by the frame rate value. The available frame rate range depends on the current video format and/or video mode.

This is set to OFF when the camera is operating in asynchronous trigger mode. For more information, see Asynchronous Triggering on page 81.

Current Frame Rate—Allows the user to query and modify the current frame rate of the camera.

Current Video Mode—Allows the user to query and modify the current video mode of the camera.

Current Video Format—Allows the user to query and modify the current video format of the camera.

5.4.1 FRAME_RATE: 83Ch



Formulas for converting the fixed point (relative) values to floating point (absolute) values are not provided. Users wishing to work with real-world values should refer to Absolute Value CSRs (page 148).

Copyright ©2011-2012 Point Grey Research Inc.

Format:

Field	Bit	Description
Presence_Inq	[0]	Presence of this feature 0: Not Available, 1: Available
Abs_Control	[1]	Absolute value control 0: Control in the Value field, 1: Control in the Absolute value CSR. If this bit = 1, the value in the Value field is read-only.
	[2-4]	Reserved
One_Push	[5]	One push auto mode (controlled automatically only once) Read: 0: Not in operation, 1: In operation Write: 1: Begin to work (self-cleared after operation) If A_M_Mode = 1, this bit is ignored
ON_OFF	[6]	Read: read a status Write: ON or OFF for this feature 0: OFF, 1: ON If this bit = 0, other fields will be read only
A_M_Mode	[7]	Read: read a current mode Write: set the mode 0: Manual, 1: Automatic
	[8-19]	Reserved
Value	[20-31]	Value. A write to this value in 'Auto' mode will be ignored.

Related Resources

Title	Link
FlyCapture SDK *ExtendedShutterEx* sample program	ExtendedShutterEx

5.4.2 CURRENT_FRAME_RATE: 600h

Format:

Field	Bit	Description
Cur_V_Frm_Rate	[0-2]	Current frame rate FrameRate_0 .. FrameRate_7
	[3-31]	Reserved.

Copyright ©2011-2012 Point Grey Research Inc.

5.4.3 CURRENT_VIDEO_MODE: 604h

Format:

Field	Bit	Description
Cur_V_Mode	[0-3]	Current video mode Mode_0 .. Mode_8
	[4-31]	Reserved.

5.4.4 CURRENT_VIDEO_FORMAT: 608h

Format:

Field	Bit	Description
Cur_V_Format	[0-2]	Current video format Format_0 .. Format_7
	[3-31]	Reserved.

5.4.5 Example: Setting a Standard Video Mode, Format and Frame Rate Using the FlyCapture API

The following FlyCapture2 code snippet sets the camera to: 640x480 Y8 at 60 FPS.

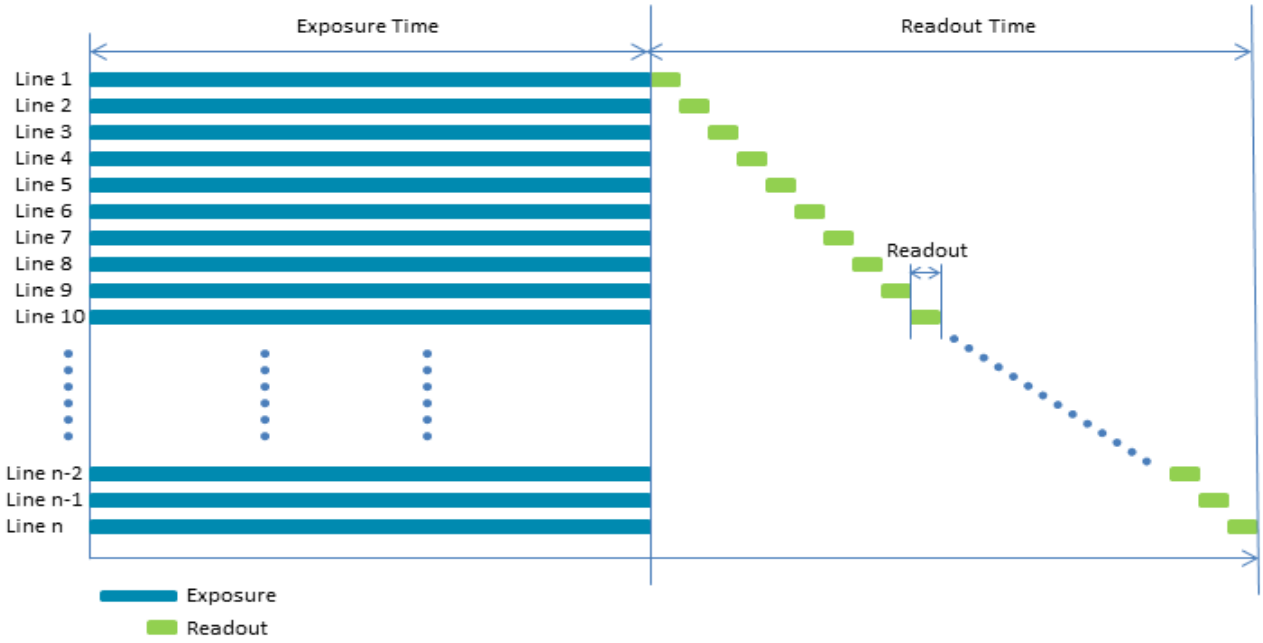
```
Camera.SetVideoModeandFrameRate( VIDEOMODE_640x480Y8 , FRAMERATE_60 );
```


Copyright ©2011-2012 Point Grey Research Inc.

6 Image Acquisition

6.1 Global Shutter

For cameras with a global shutter sensor, for each frame all of the lines start and stop exposure at the same time. The exposure time for each line is the same. Following exposure, data readout begins. The readout time for each line is the same but the start and end times are staggered.

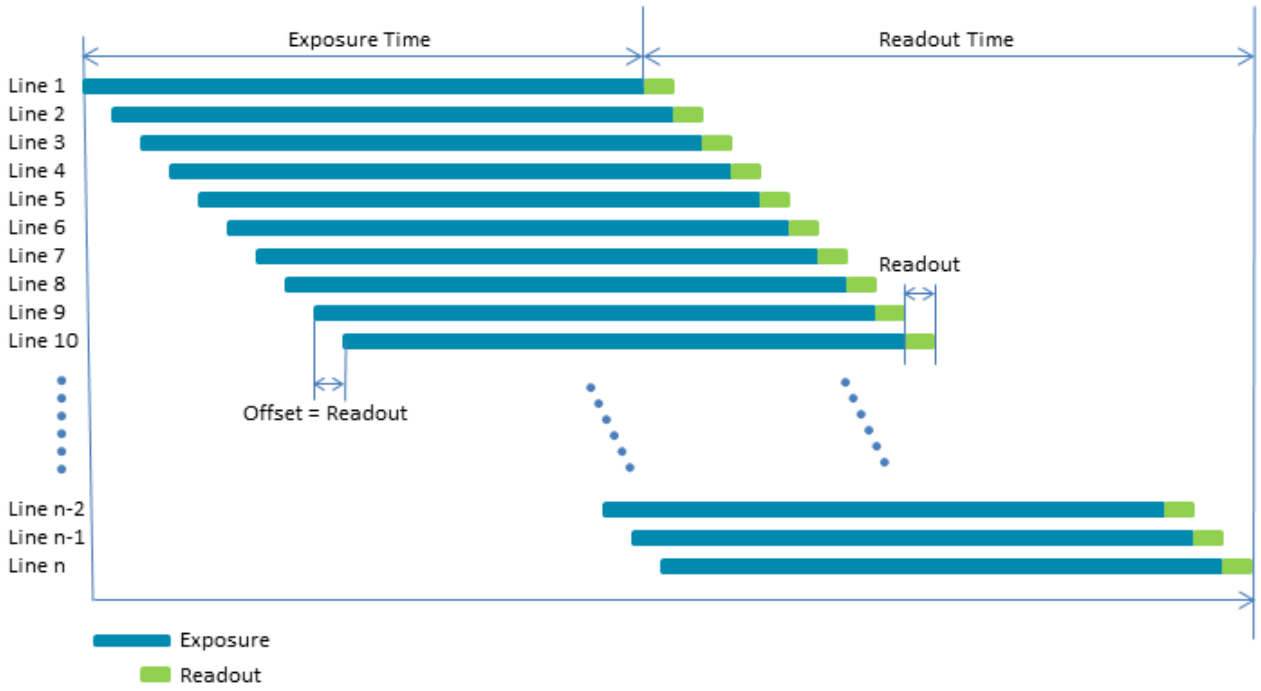


Some advantages of global shutter are more uniform brightness and minimal motion blur.

6.2 Rolling Shutter

For cameras with a rolling shutter sensor, for each frame each line begins exposure at an offset equal to each line's readout time. The exposure time for each line is the same, but the start and end times are staggered. Data readout for each line begins immediately following the line's exposure. The readout time for each line is the same, but the start and end times are staggered.

Copyright ©2011-2012 Point Grey Research Inc.

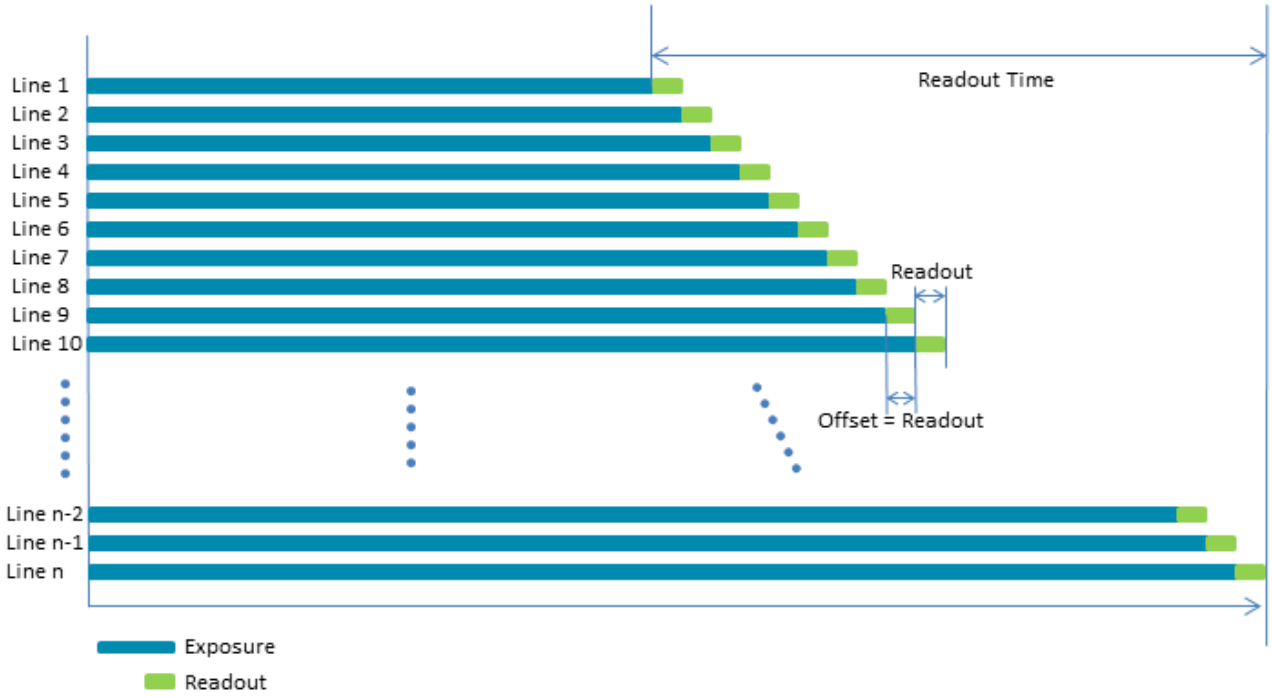


One advantage of a rolling shutter is increased sensitivity. However, because exposure starts at different times throughout the frame, there are known artifacts such as skew, wobble, and partial exposure. For more information, see Rolling Shutter Artifacts on page 128.

6.3 Rolling Shutter with Global Reset

For cameras with a rolling shutter with global reset sensor, for each frame all of the lines start exposure at the same time but the end of exposure is delayed by the offset of the previous line's readout. The exposure time for each line gradually lengthens. Data readout for each line begins immediately following the line's exposure. The readout time for each line is the same, but the start and end times are staggered.

Copyright ©2011-2012 Point Grey Research Inc.



An advantage of a rolling shutter with global reset is a reduction in image artifacts typical of rolling shutters such as skew and wobble. However, because exposure lengthens throughout the frame, there may be a gradual increase in brightness from top to bottom of an image. For more information, see Rolling Shutter Artifacts on page 128.

6.4 Asynchronous Triggering

The camera supports asynchronous triggering, which allows the start of exposure (shutter) to be initiated by an external electrical source (hardware trigger) or camera register write (software trigger).

Flea3 USB 3.0 Supported Trigger Modes			
Model	**Mode**		**More Information**
All	0	Standard	page 84
FL3-U3-13S2 FL3-U3-13Y3 FL3-U3-32S2 FL3-U3-88S2	1	Bulb	page 84
All	15	Multishot	page 85

Auto/one-push shutter and auto/one-push gain control is not supported in asynchronous trigger modes.

6.4.1 External Trigger Timing

The time from the external trigger firing to the start of shutter is shown below:

Copyright ©2011-2012 Point Grey Research Inc.

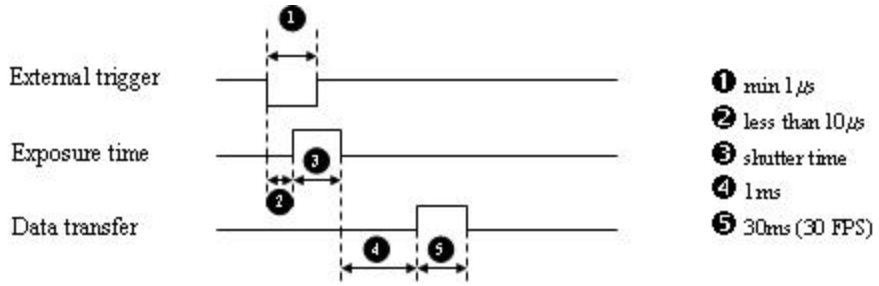


Figure 6.1: External trigger timing characteristics

It is possible for users to measure this themselves by configuring one of the camera's GPIO pins to output a strobe pulse (see Programmable Strobe Output on page 42) and connecting an oscilliscope up to the input trigger pin and the output strobe pin. The camera will strobe each time an image acquisition is triggered; the start of the strobe pulse represents the start of exposure.

6.4.2 Minimum Trigger Pulse Length

A digital signal debouncer helps to ensure that the camera does not respond to spurious electrical signals that are shorter than 16 ticks of the current pixel clock setting. This safeguard results in a minimum 16-tick delay before the camera responds to a trigger signal. The pixel clock frequency can be read from the floating point PIXEL_CLOCK_FREQ register 0x1AF0 (page 32).

6.4.3 Maximum Frame Rate in External Trigger Mode

This section only applies to Rolling Shutter models (FL3-U3-13S2 and FL3-U3-32S2).

When image capture on a rolling shutter camera is triggered by an external source, achievable frame rate is half the rate achievable in free-running mode, regardless of the rate that is specified. This difference is caused by a change in the way rolling shutter cameras operate between free-running and trigger modes.

In free-running mode, integration can occur as quickly as the camera's pixel clock allows, because by the time the bottom row of the image sensor has integrated, the top row is already read out, and is free to integrate the next image without delay.

In trigger mode, however, rolling shutter cameras begin read-out only after the entire image is integrated. The camera is not ready to receive another trigger until read-out is complete. Essentially, one frame is required for reset, and one frame for read-out. As a result, the frame rate achieved in trigger mode will be half the rate specified for free-running mode.

Copyright ©2011-2012 Point Grey Research Inc.

6.4.4 Camera Behavior Between Triggers

When operating in external trigger mode, the camera clears charges from the sensor at the horizontal pixel clock rate determined by the current frame rate. For example, if the camera is set to 10 FPS, charges are cleared off the sensor at a horizontal pixel clock rate of 15 KHz. This action takes place following shutter integration, until the next trigger is received. At that point, the horizontal clearing operation is aborted, and a final clearing of the entire sensor is performed prior to shutter integration and transmission.

6.4.5 Changing Video Modes While Triggering

You can change the video format and mode of the camera while operating in trigger mode. Whether the new mode that is requested takes effect in the next triggered image depends on the timing of the request and the trigger mode in effect. The diagram below illustrates the relationship between triggering and changing video modes.

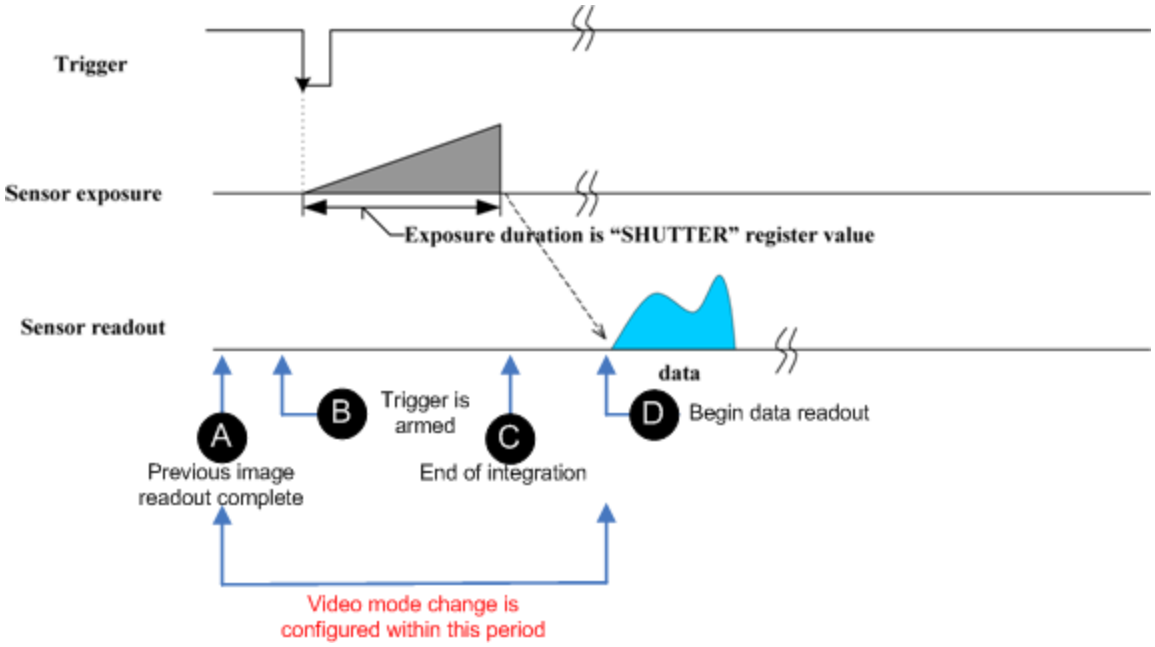


Figure 6.2: Relationship Between External Triggering and Video Mode Change Request

When operating in trigger mode 0 (page 84) or trigger mode 1 (page 84), video mode change requests made before point A on the diagram are honored in the next triggered image. The camera will attempt to honor a request made after point A in the next triggered image, but this attempt may or may not succeed, in which case the request is honored one triggered image later. In trigger mode 15 (page 85), change requests made after point A for any given image readout are honored only after a delay of one image.

Copyright ©2011-2012 Point Grey Research Inc.

6.4.6 Trigger Modes

6.4.6.1 Trigger Mode 0 ("Standard External Trigger Mode")

Trigger Mode 0 is best described as the standard external trigger mode. When the camera is put into Trigger Mode 0, the camera starts integration of the incoming light from external trigger input falling/rising edge. The Shutter valuedescribes integration time. No parameter is required. The camera can be triggered in this mode by using the GPIO pins as external trigger or by using a software trigger.

It is not possible to trigger the camera at full frame rate using Trigger Mode 0.

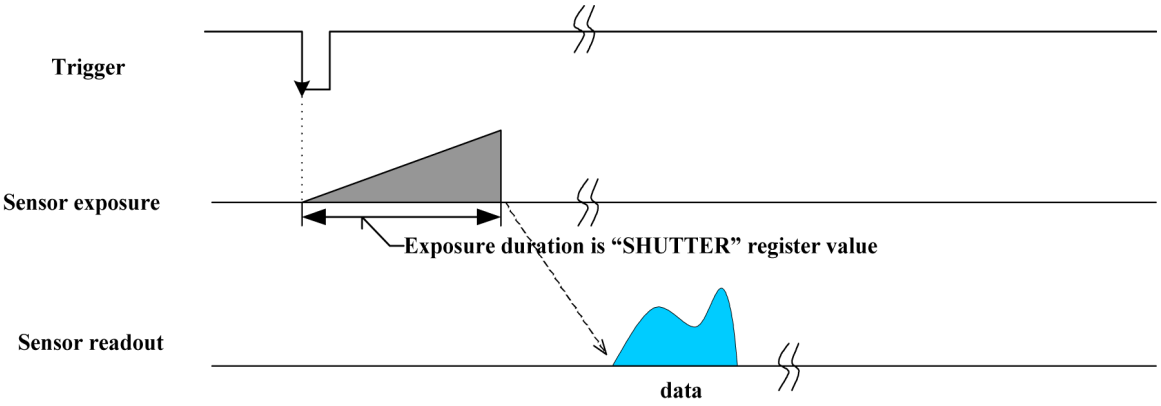


Figure 6.3: Trigger Mode 0 ("Standard External Trigger Mode")

For FL3-U3-32S2 and FL3-U3-88S2 models operating in this trigger mode, exposure is controlled by the global reset feature of the sensor. This feature may reduce distortion artifacts typical of rolling shutter sensors. For more information, see *Rolling Shutter Artifacts on page 128**.*

6.4.6.2 Trigger Mode 1 ("Bulb Shutter Mode")

Also known as Bulb Shutter mode, the camera starts integration of the incoming light from external trigger input. Integration time is equal to low state time of the external trigger input.

Copyright ©2011-2012 Point Grey Research Inc.

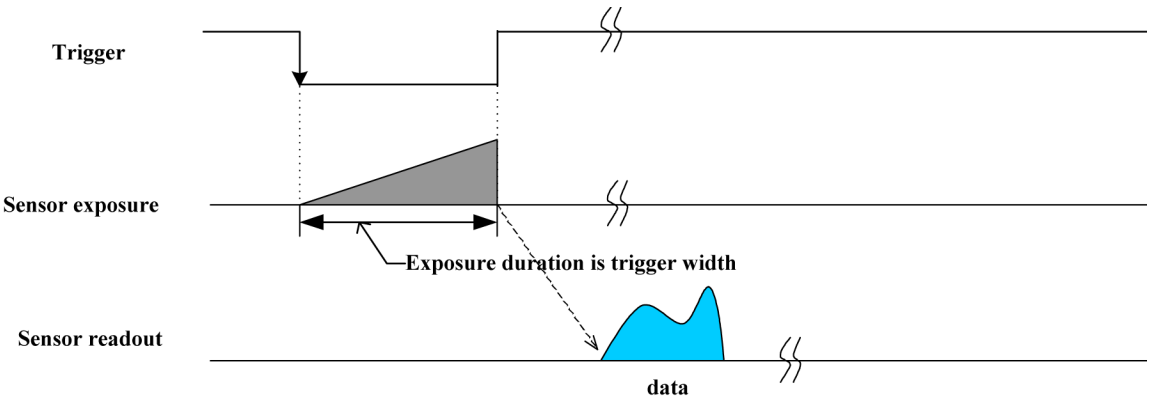


Figure 6.4: Trigger Mode 1 ("Bulb Shutter Mode")

For FL3-U3-32S2 and FL3-U3-88S2 models operating in this trigger mode, exposure is controlled by the global reset feature of the sensor. This feature may reduce distortion artifacts typical of rolling shutter sensors. For more information, see *Rolling Shutter Artifacts on page 128**.*

On FL3-U3-13Y3 a software trigger cannot be used for Trigger Mode 1.

6.4.6.3 Trigger Mode 15 ("Multi-Shot Trigger Mode")

Trigger Mode 15 is a vendor-unique trigger mode that allows the user to fire a single hardware or software trigger and have the camera acquire and stream a predetermined number of images at the current frame rate.

The number of images to be acquired is determined by the Parameter field of the TRIGGER_MODE register 0x830 (page 90), which allows up to 255 images to be acquired from a single trigger. Writing a value of 0 to the parameter field will result in an infinite number of images to be acquired, essentially allowing users to trigger the camera into a free-running mode. Once the trigger is fired, the camera will acquire N images with an exposure time equal to the value defined by the SHUTTER register, and stream the images to the host system at the current frame rate. Once this is complete, the camera can be triggered again to repeat the sequence.

Any write to the TRIGGER_MODE register 0x830 will cause the current sequence to stop.

During the capture of N images, the camera is still in an asynchronous trigger mode , rather than continuous (free-running) mode. The result of this is that the FRAME_RATE register 0x83C will be turned OFF, and the camera put into extended shutter mode. Users should therefore ensure that the maximum shutter time is limited to 1/frame_rate to get the N images captured at the current frame rate.

Related Knowledge Base Articles

Title	Article
Extended shutter mode operation for DCAM-compliant PGR Imaging Products	Knowledge Base Article 166

Copyright ©2011-2012 Point Grey Research Inc.

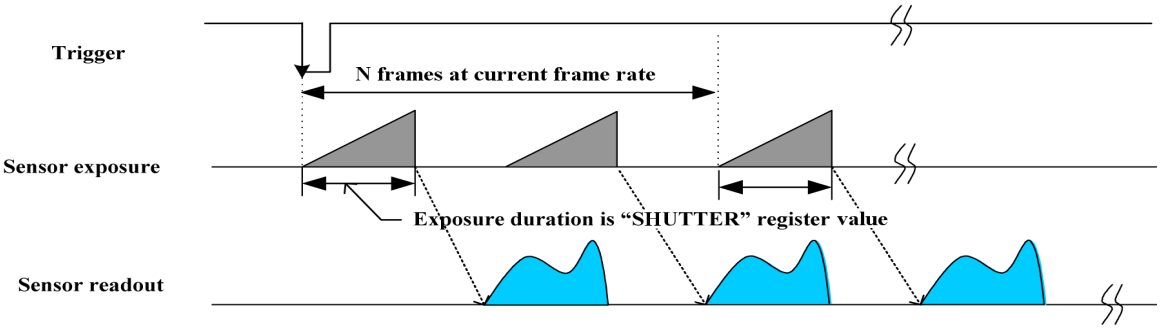


Figure 6.5: Trigger Mode 15 ("Multi-Shot Trigger Mode")

FL3-U3-32S2 and FL3-U3-88S2 models operating in this trigger mode, if the number of acquired images is 1, exposure is controlled by the global reset feature of the sensor. This feature may reduce distortion artifacts typical of rolling shutter sensors. For more information, see Rolling Shutter Artifacts on page 128.

6.4.7 Example: Asynchronous Hardware Triggering (Using the Camera Registers)

The following example illustrates how to synchronize image acquisition to a trigger from an external hardware device in Trigger Mode 0 (page 84).

Determine the Default External Trigger Pin

One of the camera GPIO pins is configured as the default trigger. To determine which pin is the default input/trigger pin either:

1. See *General Purpose Input/Output*; or
2. Get the value of the TRIGGER_MODE register 0x830 (page 90). The *Trigger_Source* field (bits 8-10) is the current trigger source. For example, if the value represented by the *Trigger_Source* field is 0, the default trigger source is GPIO0.

For example:

0x830 = 0x80100000

8	0	1	0	0	0	0	0	Hex
1000	0000	0001	0000	0000	0000	0000	0000	Binary
0-7		8-15		16-23		24-31		Bits

This indicates that a Trigger Mode is available (bit 0 = 1) but not currently enabled (bit 6 = 0). It also indicates that GPIO0 is the default trigger pin (bits 8-10 = 0), and the default polarity of the pin is active low (bit 7 = 0), which means the camera will trigger on the falling edge of a pulse.

Copyright ©2011-2012 Point Grey Research Inc.

Configure a Different GPIO Pin to be an External Trigger

If you wish to use a different GPIO pin as the external trigger instead of the default trigger, you will need to configure the specific pin to be an input trigger, then configure the camera to use this newly allocated trigger pin.

For example, to configure the camera to use GPIO2 as the external trigger pin:

1. Get the value of the PIO_DIRECTION register 0x11F8 (page 91) to determine the current states of each GPIO pin. For example:

0x11F8 = 0x20000000

2	0	0	0	0	0	0	0	Hex
0010	0000	0000	0000	0000	0000	0000	0000	Binary
0-7		8-15		16-23		24-31		Bits

Each of the first four bits represents the current state of its associated GPIO pin: '0' indicates it is a input/trigger, and '1' indicates it is an output/strobe. In the example above, 0x2 = 0010 in binary, so GPIO0, GPIO1 and GPIO 3 are all configured as inputs and GPIO2 is an output.

2. To set GPIO2 in the example above to be an input/trigger, and all other GPIO pins as outputs:

0x11F8 = 0xD0000000

D	0	0	0	0	0	0	0	Hex
1101	0000	0000	0000	0000	0000	0000	0000	Binary
0-7		8-15		16-23		24-31		Bits

3. Configure the camera to use GPIO2 as the external trigger source by setting bits 8-10 of the TRIGGER_MODE register (page 90). For example, for GPIO pin "2", we set bits 8-10 to 010, which is 2 in binary):

0x830 = 0x8040000000 (assumes bits 11-31 are zero)

8	0	4	0	0	0	0	0	Hex
1000	0000	0100	0000	0000	0000	0000	0000	Binary
0-7		8-15		16-23		24-31		Bits

Enable Trigger Mode

The camera must be put into Trigger Mode 0 to allow it to be externally triggered.

To do this in the FlyCap graphical user interface:

1. Open the Camera Control Dialog
2. Select the "Trigger" tab
3. Check the "Enable/disable trigger" ("Trigger On/Off" in earlier versions) checkbox

To do this by directly accessing the camera's TRIGGER_MODE register (page 90):

1. Get register 0x830
2. Turn trigger Mode 0 ON by setting bit 6 to one (1) and setting bits 12-15 to zero (0)

Copyright ©2011-2012 Point Grey Research Inc.

Ensuring Trigger is Armed

It is possible for the camera to be in asynchronous trigger mode but not be ready to accept a trigger. The reason is the camera may be currently exposing an image; the camera is only ready to be triggered again when this image finishes integrating.

To ensure that the camera is ready to be triggered, poll the SOFTWARE_TRIGGER register 0x62C (page 91). The concept of polling to ensure the trigger is armed is demonstrated in the AsyncTriggerEx example program distributed with the FlyCapture SDK.

Once the trigger is reporting that it is armed, there should be no delay between when the user can enable isochronous transmission and when they can trigger the camera. In fact, it is possible to trigger the camera before iso is enabled and receive the image that was triggered, provided iso is enabled at some point during exposure. For example, assuming a 10 ms shutter time, it is possible to trigger the camera, enable iso 5 ms after, and still receive the triggered image.

Externally Trigger the Camera

At this point, one of the camera's GPIO pins should be configured as the external trigger source, the camera should be in Trigger Mode 0, and the trigger is armed and ready to be fired. To acquire an image, connect the external 5V or 3.3V TTL synchronization signal to the GPIO pin. Once the trigger signal is received, an image will be grabbed.

6.4.8 Example: Asynchronous Hardware Triggering (Using the FlyCapture API)

The following FlyCapture 2.x code sample uses the C++ interface to do the following:

- Sets the trigger mode to Trigger Mode 0.
- Configures GPIO0 as the trigger input source.
- Enables triggered acquisition.
- Specifies the trigger signal polarity as an active high (rising edge) signal.

Assuming a `Camera` object `cam`:

```
TriggerMode mTrigger;
mTrigger.mode = 0;
mTrigger.source = 0;
mTrigger.parameter = 0;
mTrigger.onOff = true;
mTrigger.polarity = 1;
cam.SetTriggerMode(&mTrigger);
```

6.4.9 Asynchronous Software Triggering

Shutter integration can be initiated by a register write (software trigger) via SOFTWARE_TRIGGER register 0x62C (page 91).

The time from a software trigger initiation to the start of shutter is shown below:

Copyright ©2011-2012 Point Grey Research Inc.

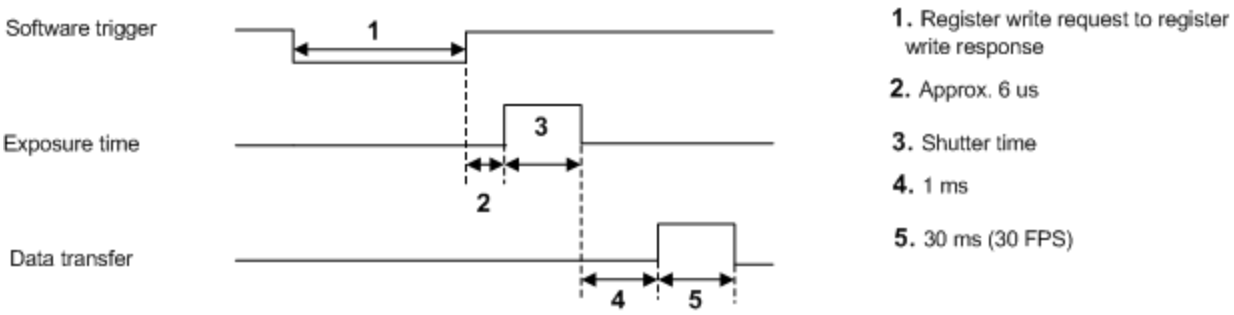


Figure 6.6: Software trigger timing

The time from when the software trigger is written on the camera to when the start of integration occurs can only be approximated. The average time from register write request to register write response is approximately 49.85 us. The "write success" response is only sent from the camera to the host system once the internal trigger pulse is initiated. We then add the trigger latency (time from the trigger pulse to the start of integration) to this, which is approximately 6 us for a camera capturing 640x480 images. Therefore, the total time from when the register is written to the start of integration is approximately 56 us.

This timing is solely from the camera perspective. It is virtually impossible to predict timing from the user perspective due to latencies in the processing of commands on the host PC.

On FL3-U3-13Y3 a software trigger cannot be used for Trigger Mode 1.

6.4.10 Asynchronous Trigger Settings

For information about working with the trigger registers in your FlyCapture application, refer to the AsyncTriggerEx sample program, available with the FlyCapture SDK.

Trigger Mode—This controls the trigger mode. When trigger mode is enabled, frame rate is changed from Auto to Off state. This change affects the maximum shutter time (page 111). If trigger mode is disabled, frame rate remains in the Off state.

Trigger Delay—This provides control over the time delay, depending on the current mode:

- In Asynchronous trigger mode: controls the delay between the trigger event and the start of integration (shutter open).
- In Free-running mode: controls the synchronization offset of the camera relative to normal synchronization. This is useful for offsetting image acquisition between automatically synchronized cameras. (Not applicable to GigE Vision or USB cameras.)

Software Trigger—This allows the user to generate a software asynchronous trigger.

Copyright ©2011-2012 Point Grey Research Inc.

6.4.10.1 TRIGGER_MODE: 830h

Control of the register is via the *ON_OFF* bit and the *Trigger_Mode* and *Parameter* fields.

Format

Field	Bit	Description
Presence_Inq	[0]	Presence of this feature 0: Not Available, 1: Available
Abs_Control	[1]	Absolute value control 0: Control with the Value field, 1: Control with the Absolute value CSR. If this bit = 1, the value in the Value field is read-only.
	[2-5]	Reserved
ON_OFF	[6]	Read: read a status Write: ON or OFF for this feature 0: OFF, 1: ON If this bit = 0, other fields will be read only
Trigger_Polarity	[7]	Select trigger polarity (except for Software_Trigger) 0: Trigger active low, 1: Trigger active high
Trigger_Source	[8-10]	Select trigger source: used to select which GPIO pin will be used for external trigger purposes. Sets trigger source ID from *Trigger_Source_Inq* field of TRIGGER_INQ register (page 136).
Trigger_Value	[11]	Trigger input raw signal value: used to determine the current raw signal value on the pin. Read only 0: Low, 1: High
	[8-11]	Reserved
Trigger_Mode	[12-15]	Trigger mode (Trigger_Mode_0..15): used to set the trigger mode to be used. For more information, see Trigger Modes on page 84. Query the *Trigger_Mode_Inq* fields of the TRIGGER_INQ register for available trigger modes.
	[16-19]	Reserved
Parameter	[20-31]	Parameter for trigger function, if required (optional)

6.4.10.2 TRIGGER_DELAY: 834h

Format:

Field	Bit	Description
Presence_Inq	[0]	Presence of this feature 0: Not Available, 1: Available
Abs_Control	[1]	Absolute value control 0: Control with the Value field, 1: Control with the Absolute value CSR. If this bit = 1, the value in the Value field is read-only.
	[2-5]	Reserved

Copyright ©2011-2012 Point Grey Research Inc.

Field	Bit	Description
ON_OFF	[6]	Read: read a status Write: ON or OFF for this feature 0: OFF, 1: ON If this bit = 0, other fields will be read only
	[7-19]	Reserved
Value	[20-31]	Value.

6.4.10.3 PIO_DIRECTION: 11F8h

If the *IOx_Mode* bit is asserted (write a '1'), this means the GPIO pin is currently configured as an output and the *Pin_Mode* of the GPIO pin (see the GPIO_CTRL_PIN_x register) is GPIO_Mode_8. Otherwise, the *Pin_Mode* will be GPIO_Mode_0 (Input). The PIO_DIRECTION register is writeable only when the current GPIO_Mode is GPIO_Mode_0 or GPIO_Mode_8.

Format

Field	Bit	Description
IO0_Mode	[0]	Current mode of GPIO Pin 0 0: Other, 1: Output
IO1_Mode	[1]	Current mode of GPIO Pin 1 0: Other, 1: Output
IO2_Mode	[2]	Current mode of GPIO Pin 2 0: Other, 1: Output
IO3_Mode	[3]	Current mode of GPIO Pin 3 0: Other, 1: Output
	[4-31]	Reserved

6.4.10.4 SOFTWARE_TRIGGER: 62Ch



Bit 0 of this register indicates if the camera is ready to be triggered again for both software and hardware triggering.

Format:

Field	Bit	Description
Software_Trigger	[0]	This bit automatically resets to zero in all trigger modes except Trigger Mode 3. Read: 0: Ready, 1: Busy Write: 0: Reset software trigger, 1: Set software trigger

6.4.10.5 ISO_CHANNEL/ISO_SPEED: 60Ch

Allows the user to query the camera's isochronous transmission channel and speed information.

Copyright ©2011-2012 Point Grey Research Inc.

Format:

Field	Bit	Description
ISO_Channel	[0-3]	Isochronous channel number for video data transmission (Except for Format_6)
	[4-5]	Reserved
ISO_Speed	[6-7]	Isochronous transmit speed code. (Except for Format_6) 0 = 100 Mbps 1 = 200 Mbps 2 = 400 Mbps
	[8-15]	Reserved
Operation_Mode	[16]	1394 operation mode Change control register sets of ISO_Channel and ISO_Speed registers 0 = Legacy (v1.30 compatible), 1 = 1394.b (v1.31 mode) Camera shall start in legacy mode for backward compatibility
	[17]	Reserved
ISO_Channel_B	[18-23]	Isochronous channel number for video data transmission of 1394.b mode (Except for Format_6)
	[24-28]	Reserved
ISO_Speed_B	[29-31]	Isochronous transmit speed code of 1394.b mode. (Except for Format_6) 0 = 100 Mbps 1 = 200 Mbps 2 = 400 Mbps 3 = 800 Mbps 4 = 1.6 Gbps 5 = 3.2 Gbpss

6.4.10.6 ISO_EN/CONTINUOUS_SHOT: 614h

This register allows the control of isochronous data transmission. During ISO_EN = 1 or One_Shot = 1 or Multi_Shot =1, the register value which reflects the Isochronous packet format cannot change. Data transfer control priority is ISO_EN > One_Shot > Multi_Shot.

Format:

Field	Bit	Description
ISO_EN/Continuous Shot	[0]	0 = Stop ISO transmission of video data. Continuous Shot is not enabled. 1 = Start ISO transmission of video data.
	[1-31]	Reserved.

6.4.10.7 ONE_SHOT/MULTI_SHOT: 61Ch

This register allows the user to control single and multi-shot functionality of the camera. During ISO_EN = 1, *One_Shot* = 1 or *Multi_Shot* =1, the register value which reflects the Isochronous packet format cannot change. Data transfer control priority is ISO_EN > One_Shot > Multi_Shot.

Copyright ©2011-2012 Point Grey Research Inc.

Format:

Field	Bit	Description
One_Shot	[0]	1 = only one frame of video data is transmitted. (Self cleared after transmission) Ignored if ISO_EN = 1
Multi_Shot	[1]	1 = N frames of video data is transmitted. (Self cleared after transmission) Ignored if ISO_EN = 1 or One_Shot =1
	[2-15]	Reserved.
Count_Number	[16-31]	Count number for Multi-shot function.

Copyright ©2011-2012 Point Grey Research Inc.

7 Imaging Parameters and Control

7.1 Overview of Imaging Parameters

The camera supports control over the following imaging parameters:

Imaging Parameter	More Information	Register Control	FlyCapture API Examples
Brightness	page 95	BRIGHTNESS: 800h on next page	Example: Setting Brightness Using the FlyCapture API on page 96
Gain	page 96	GAIN: 820h on page 97	Example: Setting Gain Using the FlyCapture API on page 98
Saturation (color models only)	page 98	SATURATION: 814h on page 98	Example: Setting Saturation Using the FlyCapture API on page 99
Hue (color models only)	page 100	HUE: 810h on page 100	
Sharpness	page 101	SHARPNESS: 808h on page 102	Example: Setting Sharpness Using the FlyCapture API on page 103
Gamma	page 103	GAMMA: 818h on page 105	Example: Setting Gamma Using the FlyCapture API on page 106
Lookup Table	page 103	LUT: 80000h – 80048h (IIDC 1.32) on page 106	
White Balance (color models only)	page 109	WHITE_BALANCE: 80Ch on page 110	Example: Setting White Balance Using the FlyCapture API on page 110
Shutter	page 111	SHUTTER: 81Ch on page 112	
Bayer Color Processing (color models only)	page 117	BAYER_TILE_MAPPING: 1040h on page 118	Example: Accessing Raw Bayer Data using FlyCapture2 on page 118
Image Mirror/Flip	page 119	MIRROR_IMAGE_CTRL: 1054h on page 119	
Embedded Image Information	page 119	FRAME_INFO: 12F8h on page 120	

Most of these imaging parameters are defined by **modes** and **values**.

There are three modes:

Mode	Description
On/Off	Determines if the feature is on. If off, values are fixed and not controllable.
Auto/Manual	If the feature is on, determines if the feature is in automatic or manual mode. If manual, values can be set.
One Push	If the feature is in manual mode, the camera executes once automatically and then returns to manual mode.

Copyright ©2011-2012 Point Grey Research Inc.

Users can define the values for manual operation of a feature.

7.2 Brightness

Brightness, also known as offset or black level, controls the level of black in an image.

The camera supports brightness control.

7.2.1 BRIGHTNESS: 800h

The value field in this register can be set in three ways:

Method	Description
Absolute	The user sets the value is set via the absolute register. The *Value* field becomes read only and reflects the converted absolute value.
Manual	The user sets the value in the *Value* field. The absolute register becomes read only and contains the current value.
Automatic	The value is set automatically by another register and both the *Value* field and the absolute register become read only.



Formulas for converting the fixed point (relative) values to floating point (absolute) values are not provided. Users wishing to work with real-world values should refer to Absolute Value CSRs (page 148).

Format:

Field	Bit	Description
Presence_Inq	[0]	Presence of this feature 0: Not Available, 1: Available
Abs_Control	[1]	Absolute value control 0: Control in the Value field, 1: Control in the Absolute value CSR. If this bit = 1, the value in the Value field is read-only.
	[2-4]	Reserved
One_Push	[5]	One push auto mode (controlled automatically only once) Read: 0: Not in operation, 1: In operation Write: 1: Begin to work (self-cleared after operation) If A_M_Mode = 1, this bit is ignored
ON_OFF	[6]	Read: read a status Write: ON or OFF for this feature 0: OFF, 1: ON If this bit = 0, other fields will be read only

Copyright ©2011-2012 Point Grey Research Inc.

Field	Bit	Description
A_M_Mode	[7]	Read: read a current mode Write: set the mode 0: Manual, 1: Automatic
	[8-19]	Reserved
Value	[20-31]	Value. A write to this value in 'Auto' mode will be ignored.

7.2.2 Example: Setting Brightness Using the FlyCapture API

The following FlyCapture 2.0 code snippet adjusts brightness to 0.5% using the C++ interface. The snippet assumes a `Camera` object `cam`.

```
//Declare a Property struct.
Property prop;
//Define the property to adjust.
prop.type = BRIGHTNESS;
//Ensure the property is set up to use absolute value control.
prop.absControl = true;
//Set the absolute value of brightness to 0.5%.
prop.absValue = 0.5;
//Set the property.
error = cam.SetProperty( &prop );
```

7.3 Gain

Gain is the amount of amplification that is applied to a pixel by the A/D converter. An increase in gain can result in a brighter image but also an increase in noise.

The camera supports automatic and one-push gain modes. The A/D converter provides a PxGA gain stage (white balance/preamp) and VGA gain stage. The main VGA gain stage is available to the user, and is variable up to 24 dB in steps of 0.046 dB. On FL3-U3-13Y3, gain is variable up to 18 dB.

Increasing gain also increases image noise, which can affect image quality. To increase image intensity, try adjusting the lens aperture (iris) and shutter time (page 111) first.

Auto/one-push gain control is only supported in free-running trigger mode.

Copyright ©2011-2012 Point Grey Research Inc.

7.3.1 GAIN: 820h

The value field in this register can be set in three ways:

Method	Description
Absolute	The user sets the value is set via the absolute register. The *Value* field becomes read only and reflects the converted absolute value.
Manual	The user sets the value in the *Value* field. The absolute register becomes read only and contains the current value.
Automatic	The value is set automatically by another register and both the *Value* field and the absolute register become read only.



Formulas for converting the fixed point (relative) values to floating point (absolute) values are not provided. Users wishing to work with real-world values should refer to Absolute Value CSRs (page 148).

Format:

Field	Bit	Description
Presence_Inq	[0]	Presence of this feature 0: Not Available, 1: Available
Abs_Control	[1]	Absolute value control 0: Control in the Value field, 1: Control in the Absolute value CSR. If this bit = 1, the value in the Value field is read-only.
	[2-4]	Reserved
One_Push	[5]	One push auto mode (controlled automatically only once) Read: 0: Not in operation, 1: In operation Write: 1: Begin to work (self-cleared after operation) If A_M_Mode = 1, this bit is ignored
ON_OFF	[6]	Read: read a status Write: ON or OFF for this feature 0: OFF, 1: ON If this bit = 0, other fields will be read only
A_M_Mode	[7]	Read: read a current mode Write: set the mode 0: Manual, 1: Automatic
	[8-19]	Reserved
Value	[20-31]	Value. A write to this value in 'Auto' mode will be ignored.

Copyright ©2011-2012 Point Grey Research Inc.

7.3.2 Example: Setting Gain Using the FlyCapture API

The following FlyCapture 2.0 code snippet adjusts gain to 10.5 dB using the C++ interface, and assumes a `Camera` object `cam`.

```
//Declare a Property struct.
Property prop;
//Define the property to adjust.
prop.type = GAIN;
//Ensure auto-adjust mode is off.
prop.autoManualMode = false;
//Ensure the property is set up to use absolute value control.
prop.absControl = true;
//Set the absolute value of gain to 10.5 dB.
prop.absValue = 10.5;
//Set the property.
error = cam.SetProperty( &prop );
```

7.4 Saturation

This provides a mechanism to control the Saturation component of the images being produced by the camera, given a standard Hue, Saturation, Value (HSV) color space.

Saturation is applicable to color models only.



Saturation in this context does not refer to the saturation of a sensor charge.

7.4.1 SATURATION: 814h

The value field in this register can be set in three ways:

Method	Description
Absolute	The user sets the value is set via the absolute register. The *Value* field becomes read only and reflects the converted absolute value.
Manual	The user sets the value in the *Value* field. The absolute register becomes read only and contains the current value.
Automatic	The value is set automatically by another register and both the *Value* field and the absolute register become read only.

Copyright ©2011-2012 Point Grey Research Inc.

Formulas for converting the fixed point (relative) values to floating point (absolute) values are not provided. Users wishing to work with real-world values should refer to Absolute Value CSRs (page 148).

Format:

Field	Bit	Description
Presence_Inq	[0]	Presence of this feature 0: Not Available, 1: Available
Abs_Control	[1]	Absolute value control 0: Control in the Value field, 1: Control in the Absolute value CSR. If this bit = 1, the value in the Value field is read-only.
	[2-4]	Reserved
One_Push	[5]	One push auto mode (controlled automatically only once) Read: 0: Not in operation, 1: In operation Write: 1: Begin to work (self-cleared after operation) If A_M_Mode = 1, this bit is ignored
ON_OFF	[6]	Read: read a status Write: ON or OFF for this feature 0: OFF, 1: ON If this bit = 0, other fields will be read only
A_M_Mode	[7]	Read: read a current mode Write: set the mode 0: Manual, 1: Automatic
	[8-19]	Reserved
Value	[20-31]	Value. A write to this value in 'Auto' mode will be ignored.

7.4.2 Example: Setting Saturation Using the FlyCapture API

The following FlyCapture 2.0 code snippet adjusts saturation to 200% using the C++ interface. The snippet assumes a `Camera` object `cam`.

```
//Declare a property struct.
Property prop;
//Define the property to adjust.
prop.type = SATURATION;
//Ensure the property is on.
prop.onOff = true;
//Ensure auto-adjust mode is off.
prop.autoManualMode = false;
```


Copyright ©2011-2012 Point Grey Research Inc.

```
//Ensure the property is set up to use absolute value control.
prop.absControl = true;
//Set the absolute value of saturation to 200%.
prop.absValue = 200;
//Set the property.
error = cam.SetProperty( &prop );
```

7.5 Hue

This provides a mechanism to control the Hue component of the images being produced by the camera, given a standard Hue, Saturation, Value (HSV) color space.

Hue is applicable to color models only.

7.5.1 HUE: 810h

The value field in this register can be set in three ways:

Method	Description
Absolute	The user sets the value is set via the absolute register. The *Value* field becomes read only and reflects the converted absolute value.
Manual	The user sets the value in the *Value* field. The absolute register becomes read only and contains the current value.
Automatic	The value is set automatically by another register and both the *Value* field and the absolute register become read only.



Formulas for converting the fixed point (relative) values to floating point (absolute) values are not provided. Users wishing to work with real-world values should refer to Absolute Value CSRs (page 148).

Format:

Field	Bit	Description
Presence_Inq	[0]	Presence of this feature 0: Not Available, 1: Available
Abs_Control	[1]	Absolute value control 0: Control in the Value field, 1: Control in the Absolute value CSR. If this bit = 1, the value in the Value field is read-only.
	[2-4]	Reserved

Copyright ©2011-2012 Point Grey Research Inc.

Field	Bit	Description
One_Push	[5]	One push auto mode (controlled automatically only once) Read: 0: Not in operation, 1: In operation Write: 1: Begin to work (self-cleared after operation) If A_M_Mode = 1, this bit is ignored
ON_OFF	[6]	Read: read a status Write: ON or OFF for this feature 0: OFF, 1: ON If this bit = 0, other fields will be read only
A_M_Mode	[7]	Read: read a current mode Write: set the mode 0: Manual, 1: Automatic
	[8-19]	Reserved
Value	[20-31]	Value. A write to this value in 'Auto' mode will be ignored.

7.5.2 Example: Setting Hue Using the FlyCapture API

The following FlyCapture 2.0 code snippet adjusts hue to -30 deg. using the C++ interface. The snippet assumes a `Camera` object `cam`.

```
//Declare a Property struct.
Property prop;
//Define the property to adjust.
prop.type = HUE;
//Ensure the property is on.
prop.onOff = true;
//Ensure the property is set up to use absolute value control.
prop.absControl = true;
//Set the absolute value of hue to -30 deg.
prop.absValue = -30;
//Set the property.
error = cam.SetProperty( &prop );
```

7.6 Sharpness

The camera supports sharpness adjustment, which refers to the filtering of an image to reduce blurring at image edges. Sharpness is implemented as an average upon a 3x3 block of pixels, and is only applied to the green component of the Bayer tiled pattern. For sharpness values greater than 1000, the pixel is sharpened; for values less

Copyright ©2011-2012 Point Grey Research Inc.

than 1000 it is blurred. When sharpness is in auto mode and gain is low, then a small amount of sharpening is applied, which increases as gain decreases. If gain is high, a small amount of blur is applied, increasing as gain increases.

When the camera is outputting raw Bayer data, Sharpness is Off by default. Otherwise, the default setting is On.

7.6.1 SHARPNESS: 808h

The value field in this register can be set in three ways:

Method	Description
Absolute	The user sets the value is set via the absolute register. The *Value* field becomes read only and reflects the converted absolute value.
Manual	The user sets the value in the *Value* field. The absolute register becomes read only and contains the current value.
Automatic	The value is set automatically by another register and both the *Value* field and the absolute register become read only.



Formulas for converting the fixed point (relative) values to floating point (absolute) values are not provided. Users wishing to work with real-world values should refer to Absolute Value CSRs (page 148).

Format:

Field	Bit	Description
Presence_Inq	[0]	Presence of this feature 0: Not Available, 1: Available
Abs_Control	[1]	Absolute value control 0: Control in the Value field, 1: Control in the Absolute value CSR. If this bit = 1, the value in the Value field is read-only.
	[2-4]	Reserved
One_Push	[5]	One push auto mode (controlled automatically only once) Read: 0: Not in operation, 1: In operation Write: 1: Begin to work (self-cleared after operation) If A_M_Mode = 1, this bit is ignored
ON_OFF	[6]	Read: read a status Write: ON or OFF for this feature 0: OFF, 1: ON If this bit = 0, other fields will be read only
A_M_Mode	[7]	Read: read a current mode Write: set the mode 0: Manual, 1: Automatic
	[8-19]	Reserved

Copyright ©2011-2012 Point Grey Research Inc.

Field	Bit	Description
Value	[20-31]	Value. A write to this value in 'Auto' mode will be ignored.

7.6.2 Example: Setting Sharpness Using the FlyCapture API

The following FlyCapture 2.0 code snippet adjusts sharpness to 1500 using the C++ interface. The snippet assumes a `Camera` object `cam`.

```
//Declare a Property struct.
Property prop;
//Define the property to adjust.
prop.type = SHARPNESS;
//Ensure the property is on.
prop.onOff = true;
//Ensure auto-adjust mode is off.
prop.autoManualMode = false;
//Set the value of sharpness to 1500.
prop.valueA = 1500;
//Set the property.
error = cam.SetProperty( &prop );
```

7.7 Gamma and Lookup Table

The camera supports gamma and lookup table (LUT) functionality.

Sensor manufacturers strive to make the transfer characteristics of sensors inherently linear, which means that as the number of photons hitting the imaging sensor increases, the resulting image intensity increases are linear. Gamma can be used to apply a non-linear mapping of the images produced by the camera. Gamma is applied after analog-to-digital conversion and is available in all pixel formats. Gamma values between 0.5 and 1 result in decreased brightness effect, while values between 1 and 4 produce an increased brightness effect. By default, Gamma is on and has a value of 1.25. To obtain a linear response, turn gamma off.

For 8-bit, gamma is applied as:

```
OUT = 255*(IN/255)^1/gamma
```



When Gamma is turned on, Lookup Table is turned off. When Lookup Table is turned on, Gamma is turned off.

Lookup Table allows the user to access and control a lookup table (LUT), with entries stored on-board the camera. The LUT is modified under the following circumstances:

Copyright ©2011-2012 Point Grey Research Inc.

- Camera reinitialization
- Changing the current video mode or current video format
- Changing gamma

The LUT can define up to 16 banks where each bank can contain up to 16 channels. Each channel shall define a table with a length of 2^{Input_Depth} entries where each entry is *Output_Depth* bits wide. Channel table entries shall be padded to 32-bits.

Each bank may be read only, write only or both read and write capable as shown by the *LUT_Bank_Rd_Inq* and *LUT_Bank_Wr_Inq* fields. The active bank shall be set by writing to the *Active_Bank* field of the LUT_Ctrl register.

The Bank_X_Offset_Inq register shall give the offset to start address of the array of channel tables in each bank. Multiple channels can be used to process color video pixel data.

Lookup Table Data Structure

Each bank of channels is composed of entries padded to a complete 32-bits. Each bank is organized as show in the table below.

Cn: Channel Number

En : Entry Number

C(0)E(0) … … C(0)E(2^{Input_Depth}-1)
C(1)E(0) … … C(1)E(2^{Input_Depth}-1)
… … …
C(Number_of_Channels-1)E(0) … … C(Number_of_Channels-1) E(2^{Input_Depth}-1)

Related Knowledge Base Articles

Title	Article
How is gamma calculated and applied?	Knowledge Base Article 391

Copyright ©2011-2012 Point Grey Research Inc.

7.7.1 GAMMA: 818h

The value field in this register can be set in three ways:

Method	Description
Absolute	The user sets the value is set via the absolute register. The *Value* field becomes read only and reflects the converted absolute value.
Manual	The user sets the value in the *Value* field. The absolute register becomes read only and contains the current value.
Automatic	The value is set automatically by another register and both the *Value* field and the absolute register become read only.



Formulas for converting the fixed point (relative) values to floating point (absolute) values are not provided. Users wishing to work with real-world values should refer to Absolute Value CSRs (page 148).

Format:

Field	Bit	Description
Presence_Inq	[0]	Presence of this feature 0: Not Available, 1: Available
Abs_Control	[1]	Absolute value control 0: Control in the Value field, 1: Control in the Absolute value CSR. If this bit = 1, the value in the Value field is read-only.
	[2-4]	Reserved
One_Push	[5]	One push auto mode (controlled automatically only once) Read: 0: Not in operation, 1: In operation Write: 1: Begin to work (self-cleared after operation) If A_M_Mode = 1, this bit is ignored
ON_OFF	[6]	Read: read a status Write: ON or OFF for this feature 0: OFF, 1: ON If this bit = 0, other fields will be read only
A_M_Mode	[7]	Read: read a current mode Write: set the mode 0: Manual, 1: Automatic
	[8-19]	Reserved
Value	[20-31]	Value. A write to this value in 'Auto' mode will be ignored.

Copyright ©2011-2012 Point Grey Research Inc.

7.7.2 Example: Setting Gamma Using the FlyCapture API

The following FlyCapture 2.0 code snippet adjusts gamma to 1.5 using the C++ interface. The snippet assumes a `Camera` object cam.

```
//Declare a Property struct.
Property prop;
//Define the property to adjust.
prop.type = GAMMA;
//Ensure the property is on.
prop.onOff = true;
//Ensure the property is set up to use absolute value control.
prop.absControl = true;
//Set the absolute value of gamma to 1.5
prop.absValue = 1.5;
//Set the property.
error = cam.SetProperty( &prop );
```

7.7.3 LUT: 80000h – 80048h (IIDC 1.32)

Offset	Name	Field	Bit	Description
80000h	LUT_Ctrl_Inq (Read Only)	Presence_Inq	[0]	Presence of this feature 0: Not Available, 1: Available
			[1-4]	Reserved
		ON_OFF_Inq	[5]	Capability of turning this feature ON or OFF.
			[6-7]	Reserved
		Input_Depth	[8-12]	Input data bit depth
		Output_Depth	[13-17]	Output data bit depth
			[18]	Reserved
		Number_of_Channels	[19-23]	Number of channels
			[24-26]	Reserved
		Number_of_Banks	[27-31]	Number of banks

Copyright ©2011-2012 Point Grey Research Inc.

Offset	Name	Field	Bit	Description
80004h	LUT_Bank_Rd_Inq	Read_Bank_0_Inq	[0]	Capability of reading data from Bank 0
		Read_Bank_1_Inq	[1]	Capability of reading data from Bank 1
		Read_Bank_2_Inq	[2]	Capability of reading data from Bank 2
		Read_Bank_3_Inq	[3]	Capability of reading data from Bank 3
		Read_Bank_4_Inq	[4]	Capability of reading data from Bank 4
		Read_Bank_5_Inq	[5]	Capability of reading data from Bank 5
		Read_Bank_6_Inq	[6]	Capability of reading data from Bank 6
		Read_Bank_7_Inq	[7]	Capability of reading data from Bank 7
		Read_Bank_8_Inq	[8]	Capability of reading data from Bank 8
		Read_Bank_9_Inq	[9]	Capability of reading data from Bank 9
		Read_Bank_10_Inq	[10]	Capability of reading data from Bank 10
		Read_Bank_11_Inq	[11]	Capability of reading data from Bank 11
		Read_Bank_12_Inq	[12]	Capability of reading data from Bank 12
		Read_Bank_13_Inq	[13]	Capability of reading data from Bank 13
		Read_Bank_14_Inq	[14]	Capability of reading data from Bank 14
		Read_Bank_15_Inq	[15]	Capability of reading data from Bank 15
	LUT_Bank_Wr_Inq	Write_Bank_0_Inq	[16]	Capability of writing data to Bank 0
		Write_Bank_1_Inq	[17]	Capability of writing data to Bank 1
		Write_Bank_2_Inq	[18]	Capability of writing data to Bank 2
		Write_Bank_3_Inq	[19]	Capability of writing data to Bank 3
		Write_Bank_4_Inq	[20]	Capability of writing data to Bank 4
		Write_Bank_5_Inq	[21]	Capability of writing data to Bank 5
		Write_Bank_6_Inq	[22]	Capability of writing data to Bank 6
		Write_Bank_7_Inq	[23]	Capability of writing data to Bank 7
		Write_Bank_8_Inq	[24]	Capability of writing data to Bank 8
		Write_Bank_9_Inq	[25]	Capability of writing data to Bank 9
		Write_Bank_10_Inq	[26]	Capability of writing data to Bank 10
		Write_Bank_11_Inq	[27]	Capability of writing data to Bank 11
		Write_Bank_12_Inq	[28]	Capability of writing data to Bank 12
		Write_Bank_13_Inq	[29]	Capability of writing data to Bank 13
		Write_Bank_14_Inq	[30]	Capability of writing data to Bank 14
		Write_Bank_15_Inq	[31]	Capability of writing data to Bank 15

Copyright ©2011-2012 Point Grey Research Inc.

Offset	Name	Field	Bit	Description
80008h	LUT_Ctrl	Presence_Inq	[0]	Presence of this Feature 0: Not Available, 1: Available
			[1-4]	Reserved
		ON_OFF	[5]	Read: read a status Write: ON or OFF this feature 0: OFF 1: ON When ON is written, the ON_OFF field of the GAMMA register is turned to OFF.
			[6-27]	Reserved
		Active_Bank	[28-31]	Active bank
8000Ch	Bank_0_ Offset_Inq	Bank_0_Quadlet_Offset	[0-31]	32-bit offset of Bank 0 table data
80010h	Bank_1_ Offset_Inq	Bank_1_Quadlet_Offset	[0-31]	32-bit offset of Bank 1 table data
80014h	Bank_2_ Offset_Inq	Bank_2_Quadlet_Offset	[0-31]	32-bit offset of Bank 2 table data
80018h	Bank_3_ Offset_Inq	Bank_3_Quadlet_Offset	[0-31]	32-bit offset of Bank 3 table data
8001Ch	Bank_4_ Offset_Inq	Bank_4_Quadlet_Offset	[0-31]	32-bit offset of Bank 4 table data
80020h	Bank_5_ Offset_Inq	Bank_5_Quadlet_Offset	[0-31]	32-bit offset of Bank 5 table data
80024h	Bank_6_ Offset_Inq	Bank_6_Quadlet_Offset	[0-31]	32-bit offset of Bank 6 table data
80028h	Bank_7_ Offset_Inq	Bank_7_Quadlet_Offset	[0-31]	32-bit offset of Bank 7 table data
8002Ch	Bank_8_ Offset_Inq	Bank_8_Quadlet_Offset	[0-31]	32-bit offset of Bank 8 table data
80030h	Bank_9_ Offset_Inq	Bank_9_Quadlet_Offset	[0-31]	32-bit offset of Bank 9 table data
80034h	Bank_10_ Offset_Inq	Bank_10_Quadlet_Offset	[0-31]	32-bit offset of Bank 10 table data
80038h	Bank_11_ Offset_Inq	Bank_11_Quadlet_Offset	[0-31]	32-bit offset of Bank 11 table data
8003Ch	Bank_12_ Offset_Inq	Bank_12_Quadlet_Offset	[0-31]	32-bit offset of Bank 12 table data
80040h	Bank_13_ Offset_Inq	Bank_13_Quadlet_Offset	[0-31]	32-bit offset of Bank 13 table data
80044h	Bank_14_ Offset_Inq	Bank_14_Quadlet_Offset	[0-31]	32-bit offset of Bank 14 table data
80048h	Bank_15_ Offset_Inq	Bank_15_Quadlet_Offset	[0-31]	32-bit offset of Bank 15 table data

Copyright ©2011-2012 Point Grey Research Inc.

7.8 White Balance

The camera supports white balance adjustment, which is a system of color correction to account for differing lighting conditions. Adjusting white balance by modifying the relative gain of R, G and B in an image enables white areas to look "whiter". Taking some subset of the target image and looking at the relative red to green and blue to green response, the objective is to scale the red and blue channels so that the response is 1:1:1.

The user can adjust the red and blue values. Both values specify relative gain, with a value that is half the maximum value being a relative gain of zero.

White Balance has two states:

State	Description
Off	The same gain is applied to all pixels in the Bayer tiling.
On/Manual	The Red value is applied to the red pixels of the Bayer tiling and the Blue value is applied to the blue pixels of the Bayer tiling.

The following table illustrates the default gain settings for most cameras.

	Red	Blue
Black and White	32	32
Color	1023	1023

The camera can also implement Auto and One Push white balance. One use of One Push/Auto white balance is to obtain a similar color balance between cameras that are slightly different from each other. In theory, if different cameras are pointed at the same scene, using One Push/Auto will result in a similar color balance between the cameras.

One Push only attempts to automatically adjust white balance for a set period of time before stopping. It uses a “white detection” algorithm that looks for “whitish” pixels in the raw Bayer image data. One Push adjusts the white balance for a specific number of iterations; if it cannot locate any whitish pixels, it will gradually look at the whitest objects in the scene and try to work off them. It will continue this until has completed its finite set of iterations.

Auto is continually adjusting white balance. It differs from One Push in that it works almost solely off the whitest objects in the scene.



The white balance of the camera before using One Push/Auto must already be relatively close; that is, if Red is set to 0 and Blue is at maximum (two extremes), One Push/Auto will not function as expected. However, if the camera is already close to being color balanced, then One Push/Auto will function properly.

Copyright ©2011-2012 Point Grey Research Inc.

7.8.1 WHITE_BALANCE: 80Ch

Format:

Field	Bit	Description
Presence_Inq	[0]	Presence of this feature 0: Not Available, 1: Available
Abs_Control	[1]	Absolute value control 0: Control with the Value field, 1: Control with the Absolute Value CSR If this bit is 1, then Value is ignored
	[2-4]	Reserved
One_Push	[5]	One push auto mode (controlled automatically by camera only once) Read: 0: Not in operation, 1: In operation Write: 1: Begin to work (self-cleared after operation) If A_M_Mode = 1, this bit is ignored
ON_OFF	[6]	Read: read a status Write: ON or OFF for this feature 0: OFF, 1: ON If this bit = 0, other fields will be read only
A_M_Mode	[7]	Read: read the current mode. Write: Set the mode. 0: Manual, 1: Auto
U_Value/B_Value	[8-19]	Blue Value. A write to this value in 'Auto' mode will be ignored.
V_Value/R_Value	[20-31]	Red Value. A write to this value in 'Auto' mode will be ignored.

7.8.2 Example: Setting White Balance Using the FlyCapture API

The following FlyCapture 2.0 code snippet adjusts the white balance red channel to 500 and the blue channel to 850 using the C++ interface. The snippet assumes a `Camera` object `cam`.

```
//Declare a Property struct.
Property prop;
//Define the property to adjust.
prop.type = WHITE_BALANCE;
//Ensure the property is on.
prop.onOff = true;
//Ensure auto-adjust mode is off.
prop.autoManualMode = false;
```


Copyright ©2011-2012 Point Grey Research Inc.

```
//Set the white balance red channel to 500.
prop.valueA = 500;
//Set the white balance blue channel to 850.
prop.valueB = 850;
//Set the property.
error = cam.SetProperty( &prop );
```

7.9 Shutter

The camera supports automatic, manual and one-push control of the image sensor shutter time. Shutter times are scaled by the divider of the basic frame rate. For example, dividing the frame rate by two (e.g. 15 FPS to 7.5 FPS) causes the maximum shutter time to double (e.g. 66ms to 133ms).

The supported shutter time range is 0.008 ms to 1 second (FL3-U3-13S2) / 0.006 ms to 1 second (FL3-U3-13Y3) / 0.016 ms to 1 second (FL3-U3-13E4) / 0.01 ms to 32 seconds (FL3-U3-32S2) / 0.021 ms to 1 second (FL3-U3-88S2).



The terms "integration" and "exposure" are often used interchangeably with "shutter".



Auto/one-push shutter control is only supported in free-running trigger mode.

The time between the end of shutter for consecutive frames will always be constant. However, if the shutter time is continually changing (e.g. shutter is in Auto mode being controlled by Auto Exposure), the time between the beginning of consecutive integrations will change. If the shutter time is constant, the time between integrations will also be constant.

The camera continually exposes and reads image data off of the sensor under the following conditions:

1. The camera is powered up; and
2. The camera is in free running, not asynchronous trigger, mode. When in async trigger mode, the camera simply clears the sensor and does not read the data off the sensor.

The camera continues to expose images even when isochronous data transfer is disabled and images are not being streamed to the computer. The camera continues exposing images even when ISO is off in order to keep things such as the auto exposure algorithm (if enabled) running. This is done to ensure that when a user starts requesting images (ISO turned on), the first image received is properly exposed.

When operating in free-running mode, changes to the shutter value take effect with the next captured image, or the one after next. Changes to shutter in asynchronous trigger mode generally take effect on the next trigger.

Copyright ©2011-2012 Point Grey Research Inc.

7.9.1 Extended Shutter Times

The maximum shutter time can be extended beyond the normal shutter range by turning off the frame rate setting. Once the frame rate is turned off, you should see the maximum value of the shutter time increase.

Extended shutter is not available for FL3-U3-13Y3.

The maximum extended shutter time reported by the SHUTTER_INQ register 51Ch (page 134) is capped at 4095 (0xFFF), the maximum value allowed by the Max_Value field of this register. Use the Max_Value of the ABS_VAL_SHUTTER register (page 148) to determine the maximum shutter.

Related Knowledge Base Articles

Title	Article
Extended shutter mode operation for DCAM-compliant PGR Imaging Products.	Knowledge Base Article 166

Related Resources

Title	Link
FlyCapture SDK *ExtendedShutterEx* sample program	ExtendedShutterEx

7.9.2 SHUTTER: 81Ch

This register has three states:

State	Description
Manual/Abs	The shutter value is set by the user via the ABS_VAL_SHUTTER register (page 148). The *Value* field becomes read only and reflects the converted value of the ABS_VAL_SHUTTER register.
Manual	The user sets the shutter value via the *Value* field. The ABS_VAL_SHUTTER register becomes read only and contains the current shutter time.
Auto	The shutter value is set by the auto exposure controller (if enabled) (page 114). Both the *Value* field and the ABS__VAL_SHUTTER register become read only.

The fixed-point (relative) values reported by this register can be converted to absolute values based on the following chart:

Fixed-point Value Range	Equivalent Absolute Value Unit	Equivalent Absolute Value Range
1 to 1024	10 us	0.01 ms to 10.24 ms
1025 to 1536	20 us	10.26 ms to 20.48 ms
1537 to 2048	40 us	20.52 to 40.96 ms

Copyright ©2011-2012 Point Grey Research Inc.

Fixed-point Value Range	Equivalent Absolute Value Unit	Equivalent Absolute Value Range
2049 to 2560	80 us	41.04 ms to 81.92 ms
…	…	…

Format:

Field	Bit	Description
Presence_Inq	[0]	Presence of this feature 0: Not Available, 1: Available
Abs_Control	[1]	Absolute value control 0: Control with the *Value* field, 1: Control with the Absolute value CSR. If this bit = 1, the value in the *Value* field is ignored.
	[2-4]	Reserved
One_Push	[5]	One push auto mode (controlled automatically by camera only once) Read: 0: Not in operation, 1: In operation Write: 1: Begin to work (self-cleared after operation) If A_M_Mode = 1, this bit is ignored
ON_OFF	[6]	Read: read a status Write: ON or OFF for this feature 0: OFF, 1: ON If this bit = 0, other fields will be read only
A_M_Mode	[7]	Read: read a current mode Write: set the mode 0: Manual, 1: Automatic
High_Value	[8-19]	Upper 4 bits of the shutter value available only in extended shutter mode (outside of specification).
Value	[20-31]	Value. A write to this value in 'Auto' mode will be ignored.

7.9.3 Example: Setting Shutter Using the FlyCapture API

The following FlyCapture 2.0 code snippet adjusts the shutter speed to 20 ms using the C++ interface. The snippet assumes a `Camera` object `cam`.

```
//Declare a Property struct.
Property prop;
//Define the property to adjust.
prop.type = SHUTTER;
//Ensure the property is on.
prop.onOff = true;
```


Copyright ©2011-2012 Point Grey Research Inc.

```
//Ensure auto-adjust mode is off.
prop.autoManualMode = false;
//Ensure the property is set up to use absolute value control.
prop.absControl = true;
//Set the absolute value of shutter to 20 ms.
prop.absValue = 20;
//Set the property.
error = cam.SetProperty( &prop );
```

7.10 Auto Exposure

Auto exposure allows the camera to automatically control shutter and/or gain in order to achieve a specific average image intensity.

Auto Exposure allows the user to control the camera system's automatic exposure algorithm. It has three useful states:

State	Description
Off	Control of the exposure is achieved via setting both shutter and gain. This mode is achieved by setting Auto Exposure to Off, or by setting Shutter and Gain to Manual.
ON Manual Exposure Control	The camera automatically modifies Shutter and Gain to try to match the average image intensity to the Auto Exposure value. This mode is achieved by setting Auto Exposure to Manual and either/both of Shutter and Gain to Automatic.
ON Auto Exposure Control	The camera automatically modifies the value in order to produce an image that is visually pleasing. This mode is achieved by setting the all three of Auto Exposure, Shutter, and Gain to Automatic. In this mode, the value reflects the average image intensity.

Auto Exposure can only control the exposure when Shutter and/or Gain are set to automatic. If only one of the settings is in "auto" mode then the auto exposure controller attempts to control the image intensity using just that one setting. If both of these settings are in "auto" mode the auto exposure controller uses a shutter-before-gain heuristic to try and maximize the signal-to-noise ratio by favoring a longer shutter time over a larger gain value.

In absolute mode, an exposure value (EV) of 0 indicates the average intensity of the image is 18% of 1023 (18% gray).

The auto exposure algorithm is only applied to the active region of interest, and not the entire array of active pixels.

Auto Exposure ROI — Allows the user to specify a region of interest within the full image to be used for both auto exposure and white balance. The ROI position and size are relative to the transmitted image. If the request ROI is of zero width or height, the entire image is used.

7.10.1 AUTO_EXPOSURE: 804h



Formulas for converting the fixed point (relative) values to floating point (absolute) values are not provided. Users wishing to work with real-world values should refer to Absolute Value CSRs (page 148).

Copyright ©2011-2012 Point Grey Research Inc.

Format:

Field	Bit	Description
Presence_Inq	[0]	Presence of this feature 0: Not Available, 1: Available
Abs_Control	[1]	Absolute value control 0: Control with the *Value* field, 1: Control with the Absolute value CSR. If this bit = 1, the value in the *Value* field is ignored.
	[2-4]	Reserved
One_Push	[5]	One push auto mode (controlled automatically by camera only once) Read: 0: Not in operation, 1: In operation Write: 1: Begin to work (self-cleared after operation) If A_M_Mode = 1, this bit is ignored
ON_OFF	[6]	Read: read a status Write: ON or OFF for this feature 0: OFF, 1: ON If this bit = 0, other fields will be read only
A_M_Mode	[7]	Read: read a current mode Write: set the mode 0: Manual, 1: Automatic
High_Value	[8-19]	Upper 4 bits of the shutter value available only in extended shutter mode (outside of specification).
Value	[20-31]	Value. A write to this value in 'Auto' mode will be ignored.

7.10.2 AE_ROI: 1A70 – 1A74h

To calculate the base address for an offset CSR:

1. *Query the offset inquiry register.*
2. *Multiple the value by 4. (The value is a 32-bit offset.)*
3. *Remove the 0xF prefix from the result. (i.e., F70000h becomes 70000h)*

Copyright ©2011-2012 Point Grey Research Inc.

Format:

Offset	Name	Field	Bit	Description
1A70h	AE_ROI_CTRL	Presence_Inq	[0]	Presence of this feature 0:Not Available, 1: Available
			[1-5]	Reserved
		ON_OFF	[6]	Read: read a status Write: ON or OFF for this feature 0: OFF, 1: ON If this bit = 0, other fields will be read only
			[7-31]	Reserved
1A74h	AE_ROI_OFFSET		[0-31]	32-bit offset for the AE_ROI CSRs
Base + 0h	AE_ROI_UNIT_POSITION_INQ	Hposunit	[0-15]	Horizontal units for position
		Vposunit	[16-31]	Vertical units for position
Base + 4h	AE_ROI_UNIT_SIZE_INQ	Hunit	[0-15]	Horizontal units for size
		Vunit	[16-31]	Vertical units for size
Base + 8h	AE_ROI_POSITION	Left	[0-15]	Left position of ROI
		Top	[16-31]	Top position of ROI
Base + Ch	AE_ROI_SIZE	Width	[0-15]	Width of ROI
		Height	[16-31]	Height of ROI

7.10.3 Example: Setting Auto Exposure Using the FlyCapture API

The following FlyCapture 2.0 code snippet adjusts auto exposure to -3.5 EV using the C++ interface. The snippet assumes a `Camera` object `cam`.

```
//Declare a Property struct.
Property prop;
//Define the property to adjust.
prop.type = AUTO_EXPOSURE;
//Ensure the property is on.
prop.onOff = true;
//Ensure auto-adjust mode is off.
prop.autoManualMode = false;
//Ensure the property is set up to use absolute value control.
prop.absControl = true;
//Set the absolute value of auto exposure to -3.5 EV.
prop.absValue = -3.5;
//Set the property.
error = cam.SetProperty( &prop );
```


Copyright ©2011-2012 Point Grey Research Inc.

7.11 Bayer Color Processing

In color models, a Bayer tile pattern color filter array captures the intensity red, green or blue in each pixel on the sensor. The image below is an example of a Bayer tile pattern.

To determine the actual pattern on your camera, query the BAYER_TILE_MAPPING register 1040h (page 118).

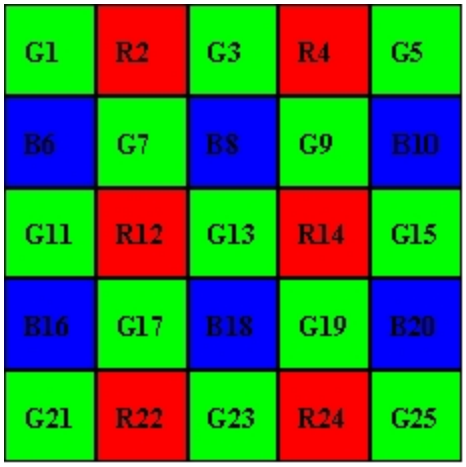


Figure 7.1: Example Bayer Tile Pattern

In order to produce color (e.g. RGB, YUV) and greyscale (e.g. Y8, Y16) images, color models perform on-board processing of the Bayer tile pattern output produced by the sensor.

Conversion from RGB to YUV uses the following formula:

$$\begin{bmatrix} Y_{601} \\ C_B \\ C_R \end{bmatrix} = \begin{bmatrix} 16 \\ 128 \\ 128 \end{bmatrix} + \frac{1}{256} \begin{bmatrix} 65.738 & 129.057 & 25.064 \\ -37.945 & -74.494 & 112.439 \\ 112.439 & -94.154 & -18.285 \end{bmatrix} \begin{bmatrix} R_{255} \\ G_{255} \\ B_{255} \end{bmatrix}$$

To convert the Bayer tile pattern to greyscale, the camera adds the value for each of the RGB components in the color processed pixel to produce a single greyscale (Y) value for that pixel, as follows:

$$Y = R/4 + G/2 + B/4$$

7.11.1 Accessing Raw Bayer Data

Users interested in accessing the raw Bayer data to apply their own color conversion algorithm or one of the FlyCapture library algorithms should acquire images using one of the Format 7 video modes that support Raw pixel encoding. (See Supported Formats, Modes and Frame Rates on page 69.)

The actual physical arrangement of the red, green and blue "pixels" for a given camera is determined by the arrangement of the color filter array on the imaging sensor itself. The format, or order, in which this raw color data is streamed out, however, depends on the specific camera model and firmware version.

Copyright ©2011-2012 Point Grey Research Inc.

Related Knowledge Base Articles

Title	Article
Different color processing algorithms	Knowledge Base Article 33
Writing color processing software and color interpolation algorithms	Knowledge Base Article 37
How is color processing performed on my camera's images?	Knowledge Base Article 89

7.11.2 BAYER_TILE_MAPPING: 1040h

This 32-bit read only register specifies the sense of the cameras' Bayer tiling. Various colors are indicated by the ASCII representation of the first letter of their name.

Color	ASCII
Red (R)	52h
Green (G)	47h
Blue (B)	42h
Monochrome (Y)	59h

For example, 0x52474742 is RGGB and 0x59595959 is YYYY.



Because color models support on-board color processing, the camera reports YYYY tiling when operating in any non-raw Bayer data format. For more information, see Bayer Color Processing on previous page.

Format

Field	Bit	Description
Bayer_Sense_A	[0-7]	ASCII representation of the first letter of the color of pixel (0,0) in the Bayer tile.
Bayer_Sense_B	[8-15]	ASCII representation of the first letter of the color of pixel (0,1) in the Bayer tile.
Bayer_Sense _C	[16-24]	ASCII representation of the first letter of the color of pixel (1,0) in the Bayer tile.
Bayer_Sense _D	[25-31]	ASCII representation of the first letter of the color of pixel (1,1) in the Bayer tile.

7.11.3 Example: Accessing Raw Bayer Data using FlyCapture2

Using the FlyCapture 2 SDK, raw image data can be accessed programmatically via the `getData` method of the `Image` class. In Raw8 modes, the first byte represents the pixel at [row 0, column 0], the second byte at [row 0, column 1], and so on.

Read the BAYER_TILE_MAPPING register 0x1040 to determine the current Bayer output format (RGGB, GRBG, and so on). Using a Bayer format of RGGB, for example, the `getData` method returns the following (assuming `char* data = rawImage.GetData();` and an `Image` object `rawImage`):

- `data[0]` = Row 0, Column 0 = red pixel (R)
- `data[1]` = Row 0, Column 1 = green pixel (G)
- `data[640]` = Row 1, Column 0 = green pixel (G)
- `data[641]` = Row 1, Column 1 = blue pixel (B)

Copyright ©2011-2012 Point Grey Research Inc.

7.12 Image Flip/Mirror

The camera supports horizontal image mirroring. The mirror image operation is performed on the camera using the on-board frame buffer (page 35).

7.12.1 MIRROR_IMAGE_CTRL: 1054h

Format:

Field	Bit	Description
Presence_Inq	[0]	Presence of this feature. 0: Not Available, 1: Available
	[1-30]	Reserved.
Mirror_Image_Ctrl	[31]	Value 0: Disable horizontal (mirror) image flip 1: Enable horizontal (mirror) image flip

7.13 Embedded Image Information

This setting controls the frame-specific information that is embedded into the first several pixels of the image. The first byte of embedded image data starts at pixel 0,0 (column 0, row 0) and continues in the first row of the image data: (1, 0), (2,0), and so forth. Users using color cameras that perform Bayer color processing on the computer must extract the value from the non-color processed image in order for the data to be valid.



Embedded image values are those in effect at the end of shutter integration.

Each piece of information takes up 32-bits (4 bytes) of the image. When the camera is operating in Y8 (8bits/pixel) mode, this is therefore 4 pixels worth of data.

The following frame-specific information can be provided:

- Timestamp
- Gain
- Shutter
- Brightness
- Exposure
- White Balance
- Frame counter
- Strobe Pattern counter
- GPIO pin state
- ROI position

Copyright ©2011-2012 Point Grey Research Inc.

If you turned on all possible options the first 40 bytes of image data would contain camera information in the following format, when accessed using the FlyCapture 2 API:

(assuming `unsigned char* data = rawImage.GetData();` and an `Image` object `rawImage`):

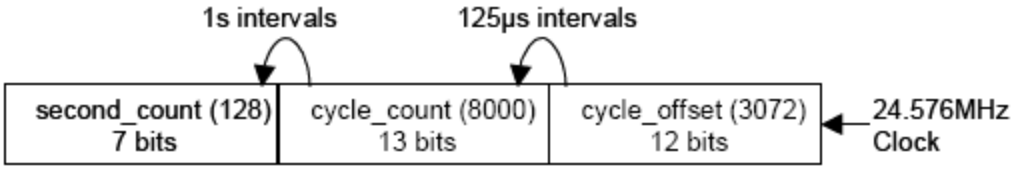
- data[0] = first byte of Timestamp data
- data[4] = first byte of Gain data
- data[24] = first byte of Frame Counter data

If only Shutter embedding were enabled, then the first 4 bytes of the image would contain Shutter information for that image. Similarly, if only Brightness embedding were enabled, the first 4 bytes would contain Brightness information.

For black and white cameras, white balance is still included, but no valid data is provided.

Interpreting Timestamp information

The Timestamp format is as follows (some cameras replace the bottom 4 bits of the cycle offset with a 4-bit version of the Frame Counter):



Cycle_offset increments from 0 to 3071, which equals one cycle_count.

Cycle_count increments from 0 to 7999, which equals one second.

Second_count increments from 0 to 127. All counters reset to 0 at the end of each cycle.

On USB 3.0 devices, the four least significant bits of the timestamp do not accurately reflect the cycle_offset and should be discounted.

Interpreting ROI information

The first two bytes are the distance from the left frame border that the region of interest (ROI) is shifted. The next two bytes are the distance from the top frame border that the ROI is shifted.

7.13.1 FRAME_INFO: 12F8h

Field	Bit	Description	Frame-Specific Information
Presence_Inq	[0]	Presence of this feature 0: Not Available, 1: Available	
	[1-5]	Reserved	

Copyright ©2011-2012 Point Grey Research Inc.

Field	Bit	Description	Frame-Specific Information
ROI_Pos_Inq	[6]	Presence of image-specific information display 0: Not Available, 1: Available	
GPIO_State_Inq	[7]		
Strobe_Pat_Inq	[8]		
Frame_Count_Inq	[9]		
WB_CSR_Inq	[10]		
Exp_CSR_Inq	[11]		
Bright_CSR_Inq	[12]		
Shutter_CSR_Inq	[13]		
Gain_CSR_Inq	[14]		
Time_Inq	[15]		
CSR_Abs_Value	[16]	Toggles between displaying 32-bit relative or absolute CSR values. If absolute value not supported, relative value is displayed. 0: Relative, 1: Absolute This field is currently read-only	
	[17-21]	Reserved	
Insert_Info	[22]	Display image-specific information 0: Off 1: On	Region of Interest (ROI) position (See page 120)
	[23]		GPIO Pin State
	[24]		Strobe Pattern Counter
	[25]		Frame Counter
	[26]		White Balance CSR
	[27]		Exposure CSR
	[28]		Brightness CSR
	[29]		Shutter Value
	[30]		Gain CSR
	[31]		Timestamp (See page 120)

Copyright ©2011-2012 Point Grey Research Inc.

8 Troubleshooting

8.1 Support

Point Grey Research endeavors to provide the highest level of technical support possible to our customers. Most support resources can be accessed through the Point Grey Product Support page.

Creating a Customer Login Account

The first step in accessing our technical support resources is to obtain a Customer Login Account. This requires a valid name and e-mail address. To apply for a Customer Login Account go to the Product Downloads page.

Knowledge Base

Our Knowledge Base contains answers to some of the most common support questions. It is constantly updated, expanded, and refined to ensure that our customers have access to the latest information.

Product Downloads

Customers with a Customer Login Account can access the latest software and firmware for their cameras from our Product Downloads page. We encourage our customers to keep their software and firmware up-to-date by downloading and installing the latest versions.

Contacting Technical Support

Before contacting Technical Support, have you:

1. Read the product documentation and user manual?
2. Searched the Knowledge Base?
3. Downloaded and installed the latest version of software and/or firmware?

If you have done all the above and still can't find an answer to your question, contact our Technical Support team.

Copyright ©2011-2012 Point Grey Research Inc.

8.2 Camera Diagnostics

Use the following parameters to monitor the error status of the camera and troubleshoot problems:

Initialize—This allows the user to reset the camera to its initial state and default settings.

Time from Initialize—This reports the time, in seconds, since the camera was initialized during a hard power-up. This is different from powering up the camera, which will not reset this time.

Time from Bus Reset—This reports the time, in seconds, since the last bus reset occurred. This will be equal to the Time from Initialize if no reset has occurred since the last time the camera was initialized.

Transmit Failure—This contains a count of the number of failed frame transmissions that have occurred since the last reset. An error occurs if the camera cannot arbitrate for the bus to transmit image data and the image data FIFO overflows.

Video Mode Error—This reports any camera configuration errors. If an error has occurred, no image data will be sent by the camera.

Camera Log—This provides access to the camera's 256 byte internal message log, which is often useful for debugging camera problems. Contact technical support for interpretation of message logs.

8.2.1 INITIALIZE: 000h

Format:

Offset	Name	Field	Bit	Description
000h	INITIALIZE	Initialize	[0]	If this bit is set to 1, the camera will reset to its initial state and default settings. This bit is self-cleared.
			[1-31]	Reserved

8.2.2 TIME_FROM_INITIALIZE: 12E0h

Format:

Field	Bit	Description
Presence_Inq	[0]	Presence of this feature 0: Not Available, 1: Available
Time_From_Init	[1-31]	Time in seconds since the camera was initialized.

8.2.3 TIME_FROM_BUS_RESET: 12E4h

Format:

Field	Bit	Description
Presence_Inq	[0]	Presence of this feature 0: Not Available, 1: Available
Time_From_Reset	[1-31]	Time in seconds since the camera detected a bus reset .

Copyright ©2011-2012 Point Grey Research Inc.

8.2.4 XMIT_FAILURE: 12FCh

Format:

Field	Bit	Description
Presence_Inq	[0]	Presence of this feature 0: Not Available, 1: Available
Frame_Count	[1-31]	Read: Count of failed frame transmissions. Write: Reset.

8.2.5 VMODE_ERROR_STATUS: 628h

Format:

Field	Bit	Description
Vmode_Error_Status	[0]	Error status of combination of video format, mode, frame rate and ISO_SPEED setting. 0: no error, 1: error This flag will be updated every time one of the above settings is changed by writing a new value.
	[1-31]	Reserved.

8.2.6 CAMERA_LOG: 1D00 – 1DFFh

Format:

Offset	Description
1D00..1DFF	Each byte is the hexadecimal representation of an ASCII character. The log is in reverse byte order, with the latest entry at the beginning of the log. The most significant byte of address 1D00h is the last byte in the log.

Copyright ©2011-2012 Point Grey Research Inc.

8.3 Status Indicator LED

LED Status	Description
Off	Not receiving power
Steady green	Camera receiving power (~3 seconds)
Flashing yellow	Initializing FPGA (~1 second)
Steady yellow	FPGA initialized (~1 second)
Steady yellow-green	Sensor powered
Steady bright green	Acquiring and transmitting images
Flashing bright, then brighter green	Camera registers being accessed (no image acquisition)
Steady red	Temporary camera problem
Slow flashing red	Serious camera problem

8.3.1 LED_CTRL: 1A14h

Format:

Field	Bit	Description
Presence_Inq	[0]	Presence of this feature 0: Not Available, 1: Available
	[1-22]	Reserved
LED_Ctrl	[23-31]	Enable or disable the LED 0x00: Off, 0x74: On

Copyright ©2011-2012 Point Grey Research Inc.

8.4 Test Pattern

The camera is capable of outputting continuous static images for testing and development purposes. The test pattern image is inserted into the imaging pipeline immediately prior to the transfer to the on-board FIFO, and is therefore not subject to changes in imaging parameters.

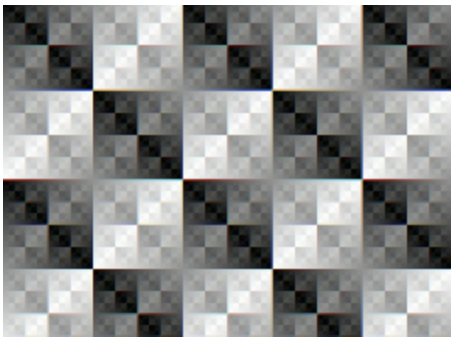


Figure 8.1: Test Pattern Sample Image

8.4.1 TEST_PATTERN: 104Ch

Format:

Field	Bit	Description
Presence_Inq	[0]	Presence of this feature 0: Not Available, 1: Available
	[1-30]	Reserved
Test_Pattern_1	[31]	Value 0: Disable test pattern, 1: Enable test pattern

Copyright ©2011-2012 Point Grey Research Inc.

8.5 Blemish Pixel Artifacts

Cosmic radiation may cause random pixels to generate a permanently high charge, resulting in a permanently lit, or 'glowing,' appearance. Point Grey tests for and programs white blemish pixel correction into the camera firmware.

In very rare cases, one or more pixels in the sensor array may stop responding and appear black (dead) or white (hot/stuck).

8.5.1 Pixel Defect Correction

Point Grey tests for blemish pixels on each camera. The mechanism to correct blemish pixels is hard-coded into the camera firmware, and can be turned off and on by the user. Pixel correction is on by default. The correction algorithm involves applying the average color or grayscale values of neighboring pixels to the blemish pixel.

The FL3-U3-13E4 camera allows for on-sensor pixel correction which is enabled by default. Users can disable the on-sensor pixel correction to use the Point Grey FPGA pixel correction. Only one pixel correction algorithm can be used at a time. If both versions are enabled, the on-sensor pixel correction is used.



Pixel correction is not done in any of the binning modes (page 63) or in Video Mode 10 (FL3-U3-88S2 only).

Related Knowledge Base Articles

Title	Article
How Point Grey tests for white blemish pixels	Knowledge Base Article 314

8.5.2 PIXEL_DEFECT_CTRL: 1A60h

Format:

Field	Bit	Description
Presence_Inq	[0]	Presence of this feature 0: Not Available, 1: Available
	[1-5]	Reserved
	[5]	**FL3-U3-13E4 only**—Enable or disable on-sensor pixel correction 0: Off, 1: On
ON_OFF	[6]	Enable or disable FPGA pixel correction 0: Off, 1: On
	[7]	Reserved
Max_Pixels	[8-19]	Maximum number of pixels that can be corrected by the FPGA
Cur_Pixels	[20-31]	Current number of pixels that are being corrected by the FPGA
FL3-U3-13E4 only—If both bits 5 and 6 are set to 1, only the on-sensor pixel correction is enabled.		

Copyright ©2011-2012 Point Grey Research Inc.

8.6 Rolling Shutter Artifacts

The rolling shutter used on the CMOS sensor of the camera may produce undesirable effects under certain conditions.

Skew—Skew occurs if the camera is panning horizontally while the sensor is still exposing making vertical objects appear to be leaning. Skew can be minimized by slowing the pan or increasing the frame rate (or both).

Wobble—Wobble is a stretching of objects due to vibration or sudden motion of the camera or the object. Wobble can be minimized by increasing the frame rate or slowing the shutter speed; however, the wobble effect is then masked by motion blur.

Partial Exposure—Partial Exposure occurs when a sudden change of lighting, such as a flash, significantly alters the exposure, but only for a portion of the frame. This results in dark and bright horizontal bands. Partial Exposure can be minimized by synching the light source to the exposure.

Related Knowledge Base Articles

Title	Article
Key differences between rolling shutter and frame (global) shutter	Knowledge Base Article 115

For models with a global reset sensor, rolling shutter distortion may be minimized by capturing images in Trigger Mode 0 , Trigger Mode 1 or Trigger Mode 15 (only when number of acquired images = 1). In these modes, exposure is controlled by the global reset feature of the sensor. In global reset mode, all of the pixels on the sensor begin collecting charge simultaneously, rather than row by row. The end of integration, however, is still delayed on the sensor row by row from top to bottom as readout takes place. One result of this behavior is a partial reduction in motion blur and other effects typical of rolling shutters. Another less desirable effect may be a gradual increase in brightness from top to bottom of an image.

Unlike standard rolling shutter behavior, using a strobe flash in global reset mode may further reduce image distortion, and in dark conditions may even eliminate it.

Copyright ©2011-2012 Point Grey Research Inc.

8.7 Fixed Pattern Noise Artifact

With FL3-U3-13Y3, an internal sensor artifact may cause fixed pattern noise (FPN) at high saturation points on an image. FPN most commonly manifests as vertical stripes or lines. To reduce this issue, Point Grey applies flat field correction to the camera. Adjusting image parameters to avoid over saturation also minimizes this effect.

The mechanism to correct FPN is hard-coded into the camera firmware. It is on by default but can be turned off by the user.

8.7.1 FPN_CTRL: 1A0Ch

Format:

Field	Bit	Description
Presence_Inq	[0]	Presence of this feature 0: Not Available, 1: Available
	[1-5]	Reserved
ON_OFF	[6]	Enable or disable fixed pattern noise correction 0: Off, 1: On
Reserved	[7-31]	Reserved

Copyright ©2011-2012 Point Grey Research Inc.

Appendix A: Control and Status Registers

A.1 General Register Information

A.1.1 Register Memory Map

The camera uses a 64-bit fixed addressing model. The upper 10 bits show the Bus ID, and the next six bits show the Node ID. The next 20 bits must be 1 (FFFF Fh).

Address	Register Name	Description
FFFF F000 0000h	Base address	
FFFF F000 0400h	Config ROM	
FFFF F0F0 0000h	Base address for all camera control command registers	
The following register addresses are offset from the base address, FFFF F0F0 0000h.		
000h	INITIALIZE	Camera initialize register
100h 180h	V_FORMAT_INQ V_MODE_INQ_X	Inquiry register for video format Inquiry register for video mode
200h	V_RATE_INQ_y_X	Inquiry register for video frame rate
300h	Reserved	
400h	BASIC_FUNC_INQ FEATURE_HI_INQ FEATURE_LO_INQ	Inquiry register for feature presence
500h	*Feature_Name*_INQ	Inquiry register for feature elements
600h 640h	CAM_STA_CTRL	Status and control register for camera Feature control error status register
700h	ABS_CSR_HI_INQ_x	Inquiry register for Absolute value CSR offset address
800h	Feature_Name	Status and control register for feature

The FlyCapture API library has function calls to get and set camera register values. These function calls automatically take into account the base address. For example, to get the 32-bit value of the SHUTTER register at 0xFFFF F0F0 081C:

FlyCapture v1.x:

```
flycaptureGetCameraRegister(context, 0x81C, &ulValue);
flycaptureSetCameraRegister(context, 0x81C, ulValue);
```

FlyCapture v2.x (assuming a `camera` object named `cam`):

```
cam.ReadRegister(0x81C, &regVal);
cam.WriteRegister(0x81C, regVal, broadcast=false);
```


Copyright ©2011-2012 Point Grey Research Inc.

Broadcast is only available for FlyCapture2 and FireWire cameras. FireWire has the ability to write to multiple cameras at the same time.

A.1.2 Config ROM

A.1.2.1 Root Directory

	Offset	Bit	Description
Bus Info Block	400h	[0-7]	04h
		[8-15]	crc_length
		[16-31]	rom_crc_value
	404h	[0-7]	31h
		[8-15]	33h
		[16-23]	39h
		[24-31]	34h
	408h	[0-3]	0010 (binary)
		[4-7]	Reserved
		[8-15]	FFh
		[16-19]	max_rec
		[20]	Reserved
		[21-23]	mxrom
		[24-31]	chip_id_hi
	40Ch	[0-23]	node_vendor_id
		[24-31]	chip_id_hi
	410h	[0-31]	chip_id_lo
Root Directory	414h	[0-15]	0004h
		[16-31]	CRC
	418h	[0-7]	03h
		[8-31]	module_vendor_id
	41Ch	[0-7]	0Ch
		[8-15]	Reserved
		[16-31]	1000001111000000 (binary)
	420h	[0-7]	8Dh
		[8-31]	indirect_offset
	424h	[0-7]	D1h
		[8-31]	unit_directory_offset

Copyright ©2011-2012 Point Grey Research Inc.

A.1.2.2 Unit Directory

Offset	Bit	Description
0000h	[0-15]	0003h
	[16-31]	CRC
0004h	[0-7]	12h
	[8-31]	unit_spec_ID (=0x00A02D)
0008h	[0-7]	13h
	[8-31]	unit_sw_version (=0x000102)
000Ch	[0-7]	D4h
	[8-31]	unit dependent directory offset

A.1.2.3 Unit Dependent Info

Offset	Bit	Description
0000h	[0-15]	unit_dep_info_length
	[16-31]	CRC
0004h	[0-7]	40h
	[8-31]	command_regs_base 32-bit offset from the base address of initial register space of the base address of the command registers
0008h	[0-7]	81h
	[8-31]	vendor_name_leaf The number of 32-bits from the address of the vendor_name_leaf entry to the address of the vendor_ name leaf containing an ASCII representation of the vendor name of this node
000Ch	[0-7]	82h
	[8-31]	model_name_leaf The number of 32-bits from the address of the model_name_leaf entry to the address of the model_ name leaf containing an ASCII representation of the model name of this node
0010h	[0-7]	38h
	[8-31]	unit_sub_sw_version the sub version information of this unit unit_sub_sw_version = 0x000000h or unspecified for IIDC v1.30 unit_sub_sw_version = 0x000010h for IIDC v1.31 unit_sub_sw_version = 0x000020h for IIDC v1.32
0014h	[0-7]	39h
	[8-31]	Reserved
0018h	[0-7]	3Ah
	[8-31]	Reserved
001Ch	[0-7]	3Bh
	[8-31]	Reserved

Copyright ©2011-2012 Point Grey Research Inc.

Offset	Bit	Description
0020h	[0-7]	3Ch
	[8-31]	vendor_unique_info_0
0024h	[0-7]	3Dh
	[8-31]	vendor_unique_info_1
0028h	[0-7]	3Eh
	[8-31]	vendor_unique_info_2
002Ch	[0-7]	3Fh
	[8-31]	vendor_unique_info_3

A.1.3 Calculating Base Register Addresses using 32-bit Offsets

The addresses for many CSRs, such as those that provide control over absolute values, custom video modes, PIO, SIO and strobe output, can vary between cameras. In order to provide a common mechanism across camera models for determining the location of these CSRs relative to the base address, there are fixed locations for inquiry registers that contain offsets, or pointers, to the actual offsets.



To calculate the base address for an offset CSR:

1. *Query the offset inquiry register.*
2. *Multiple the value by 4. (The value is a 32-bit offset.)*
3. *Remove the 0xF prefix from the result. (i.e., F70000h becomes 70000h)*

For example, the Absolute Value CSRs provide minimum, maximum and current real-world values for camera properties such as gain, shutter, etc., as described in *Absolute Value Registers* (on page 148). To determine the location of the shutter absolute value registers (code snippets use function calls included in the FlyCapture SDK, and assume a `Camera` object `cam`):

1. Read the ABS_CSR_HI_INQ_7 register 71Ch to obtain the 32-bit offset for the absolute value CSR for shutter.
```
unsigned int ulValue;

cam.ReadRegister(0x71C, &ulValue);
```
2. The ulValue is a 32-bit offset, so multiply by 4 to get the actual offset.
```
ulValue = ulValue * 4; // ulValue == 0x3C0244, actual offset == 0xF00910
```
3. The actual offset 0xF00910 represents the offset from the base address 0xFFFF Fxxx xxxx. Since the PGR FlyCapture API automatically takes into account the base offset 0xFFFF F0F0 0000, the actual offset in this example would be 0x910.
```
ulValue = ulValue & 0xFFFF;
```

A.2 Inquiry Registers

A.2.1 Basic Functions Inquiry Registers

The following registers show which basic functions are implemented on the camera.

Copyright ©2011-2012 Point Grey Research Inc.

(Bit values = 0: Not Available, 1: Available)

Format:

Offset	Name	Field	Bit	Description
400h	BASIC_FUNC_INQ	Advanced_Feature_Inq	[0]	Inquiry for advanced feature. (Vendor Unique Features)
		Vmode_Error_Status_Inq	[1]	Inquiry for existence of Vmode_Error_Status register
		Feature_Control_Error_Status_Inq	[2]	Inquiry for existence of Feature_Control_Error_ Status register
		Opt_Func_CSR_Inq	[3]	Inquiry for optional function CSR.
			[4-7]	Reserved
		1394.b_mode_Capability	[8]	Inquiry for 1394.b mode capability
			[9-15]	Reserved
		Cam_Power_Cntl	[16]	Camera process power ON/OFF capability
			[17-18]	Reserved
		One_Shot_Inq	[19]	One shot transmission capability
		Multi_Shot_Inq	[20]	Multi shot transmission capability
		Retransmit_Inq	[21]	Retransmit latest image capability (One_ shot/Retransmit)
		Image_Buffer_Inq	[22]	Image buffer capability (Multi_shot/Image_Buffer)
			[23-27]	Reserved
		Memory_Channel	[28-31]	Maximum memory channel number (N) Memory channel 0 = Factory setting memory 1 = Memory Ch 1 2 = Memory Ch 2 : N= Memory Ch N If 0000, user memory is not available.

A.2.2 Feature Presence Inquiry Registers

The following registers show the presence of the camera features or optional functions implemented on the camera.

(Bit values = 0: Not Available, 1: Available)

Copyright ©2011-2012 Point Grey Research Inc.

Format:

Offset	Name	Field	Bit	Description
404h	Feature_Hi_Inq	Brightness	[0]	Brightness Control
		Auto_Exposure	[1]	Auto Exposure Control
		Sharpness	[2]	Sharpness Control
		White_Balance	[3]	White Balance Control
		Hue	[4]	Hue Control
		Saturation	[5]	Saturation Control
		Gamma	[6]	Gamma Control
		Shutter	[7]	Shutter Speed Control
		Gain	[8]	Gain Control
		Iris	[9]	IRIS Control
		Focus	[10]	Focus Control
		Temperature	[11]	Temperature Control
		Trigger	[12]	Trigger Control
		Trigger_Delay	[13	Trigger Delay Control
		White_Shading	[14]	White Shading Compensation Control
		Frame_Rate	[15]	Frame rate prioritize control
			[16-31]	Reserved
408h	Feature_Lo_Inq	Zoom	[0]	Zoom Control
		Pan	[1]	Pan Control
		Tilt	[2]	Tilt Control
		Optical Filter	[3]	Optical Filter Control
			[4-15]	Reserved
		Capture_Size	[16]	Capture image size for Format_6
		Capture_Quality	[17]	Capture image quality for Format_6
			[18-31]	Reserved
40Ch	Opt_Function_Inq	-	[0]	Reserved
		PIO	[1]	Parallel input/output control
		SIO	[2]	Serial Input/output control
		Strobe_Output	[3]	Strobe signal output
		Lookup_Table	[4]	Lookup table control
		-	[5-31]	Reserved
410h-47Fh	Reserved			
480h	Advanced_Feature_Inq	Advanced_ Feature_Quadlet_ Offset	[0-31]	32-bit offset of the advanced feature CSRs (see the Advanced Registers section) from the base address of initial register space. (Vendor unique)

Copyright ©2011-2012 Point Grey Research Inc.

Offset	Name	Field	Bit	Description
484h	PIO_Control_CSR_Inq	PIO_Control_ Quadlet_Offset	[0-31]	32-bit offset of the PIO control CSRs (see the Parallel Input/Output (PIO) section) from the base address of initial register space.
488h	SIO_Control_CSR_Inq	SIO_Control_ Quadlet_Offset	[0-31]	32-bit offset of the SIO control CSRs (see the Serial Port Input/Output (SIO) section) from the base address of initial register space.
48Ch	Strobe_Output_CSR_Inq	Strobe_Output_ Quadlet_Offset	[0-31]	32-bit offset of the strobe output signal CSRs (see the Strobe Signal Output section) from the base address of initial register space.
490h	Lookup_Table_CSR_Inq	Lookup_Table_ Quadlet_Offset	[0-31]	32-bit offset of the Lookup Table CSRs from the baes address of initial register space.

A.2.3 Feature Elements Inquiry Registers

The following registers show the presence of specific features, modes and minimum and maximum values for each of the camera features or optional functions implemented by the camera.

(Bit values = 0: Not Available, 1: Available)

Offset	Name	Field	Bit	Description
500h	BRIGHTNESS_INQ	Presence_Inq	[0]	Presence of this feature
		Abs_Control_Inq	[1]	Absolute value control
			[2]	Reserved
		One_Push_Inq	[3]	One push mode (controlled automatically only once)
		ReadOut_Inq	[4]	Ability to read the value of this feature
		On_Off_Inq	[5]	Ability to switch feature ON and OFF
		Auto_Inq	[6]	Auto mode (controlled automatically)
		Manual_Inq	[7]	Manual mode (controlled by user)
		Min_Value	[8-19]	Minimum value for this feature control
		Max_Value	[20-31]	Maximum value for this feature control
504h	AUTO_EXPOSURE_INQ	Same format as the BRIGHTNESS_INQ register		
508h	SHARPNESS_INQ	Same format as the BRIGHTNESS_INQ register		
50Ch	WHITE_BALANCE_INQ	Same format as the BRIGHTNESS_INQ register		
510h	HUE_INQ	Same format as the BRIGHTNESS_INQ register		
514h	SATURATION_INQ	Same format as the BRIGHTNESS_INQ register		
518h	GAMMA_INQ	Same format as the BRIGHTNESS_INQ register		
51Ch	SHUTTER_INQ	Same format as the BRIGHTNESS_INQ register		
520h	GAIN_INQ	Same format as the BRIGHTNESS_INQ register		
524h	IRIS_INQ	Same format as the BRIGHTNESS_INQ register		
528h	FOCUS_INQ	Same format as the BRIGHTNESS_INQ register		

Copyright ©2011-2012 Point Grey Research Inc.

Offset	Name	Field	Bit	Description
52Ch	TEMPERATURE_INQ	Same format as the BRIGHTNESS_INQ register		
530h	TRIGGER_INQ	Presence_Inq	[0]	Presence of this feature
		Abs_Control_Inq	[1]	Absolute value control
			[2-3]	Reserved
		ReadOut_Inq	[4]	Ability to read the value of this feature
		On_Off_Inq	[5]	Ability to switch feature ON and OFF
		Polarity_Inq	[6]	Ability to change trigger input polarity
		Value_Read_Inq	[7]	Ability to read raw trigger input
		Trigger_Source0_Inq	[8]	Presence of Trigger Source 0 ID=0
		Trigger_Source1_Inq	[9]	Presence of Trigger Source 1 ID=1
		Trigger_Source2_Inq	[10]	Presence of Trigger Source 2 ID=2
		Trigger_Source3_Inq	[11]	Presence of Trigger Source 3 ID=3
			[12-14]	Reserved
		Software_Trigger_Inq	[15]	Presence of Software Trigger ID=7
		Trigger_Mode0_Inq	[16]	Presence of Trigger Mode 0
		Trigger_Mode1_Inq	[17]	Presence of Trigger Mode 1
		Trigger_Mode2_Inq	[18]	Presence of Trigger Mode 2
		Trigger_Mode3_Inq	[19]	Presence of Trigger Mode 3
		Trigger_Mode4_Inq	[20]	Presence of Trigger Mode 4
		Trigger_Mode5_Inq	[21]	Presence of Trigger Mode 5
			[22-29]	Reserved
		Trigger_Mode14_Inq	[30]	Presence of Trigger Mode 14 (Vendor unique trigger mode 0)
		Trigger_Mode15_Inq	[31]	Presence of Trigger Mode 15 (Vendor unique trigger mode 1)
534h	TRIGGER_DLY_INQ	Presence_Inq	[0]	Presence of this feature
		Abs_Control_Inq	[1]	Absolute value control
			[2]	Reserved
		One_Push_Inq	[3]	One push mode (controlled automatically only once)
		ReadOut_Inq	[4]	Ability to read the value of this feature
		On_Off_Inq	[5]	Ability to switch feature ON and OFF
			[6-7]	Reserved
		Min_Value	[8-19]	Minimum value for this feature control
		Max_Value	[20-31]	Maximum value for this feature control
538h	WHITE_SHD_INQ	Same format as the BRIGHTNESS_INQ register		
53Ch	FRAME_RATE_INQ	Same format as the BRIGHTNESS_INQ register		

Copyright ©2011-2012 Point Grey Research Inc.

Offset	Name	Field	Bit	Description
540h : 57Ch	Reserved for other FEATURE_HI_INQ			
580h	ZOOM_INQ	Same format as the BRIGHTNESS_INQ register		
584h	PAN_INQ	Same format as the BRIGHTNESS_INQ register		
588h	TILT_INQ	Same format as the BRIGHTNESS_INQ register		
58Ch	OPTICAL_FILTER_INQ	Same format as the BRIGHTNESS_INQ register		

A.2.4 Video Format Inquiry Registers

The following registers may be used to determine the video formats that are available with the camera.

(Bit values = 0: Not Available, 1: Available)

Format:

Offset	Name	Field	Bit	Description
100h	V_FORMAT_INQ	Format_0	[0]	VGA non-compressed format (160x120 through 640x480)
		Format_1	[1]	Super VGA non-compressed format (1) (800x600 through 1024x768)
		Format_2	[2]	Super VGA non-compressed format (2) (1280x960 through 1600x1200)
		Format_x	[3-5]	Reserved for other formats
		Format_6	[6]	Still Image Format
		Format_7	[7]	Partial Image Size Format
			[8-31]	Reserved

A.2.5 Video Mode Inquiry Registers

The following registers may be used to determine the video modes that are available with the camera.

(Bit values = 0: Not Available, 1: Available)

Copyright ©2011-2012 Point Grey Research Inc.

Format:

Offset	Name	Field	Bit	Description
180h	V_MODE_INQ_O (Format 0)	Mode_0	[0]	160 x 120 YUV(4:4:4) Mode (24 bits/pixel)
		Mode_1	[1]	320 x 240 YUV(4:2:2) Mode (16 bits/pixel)
		Mode_2	[2]	640 x 480 YUV(4:1:1) Mode (12 bits/pixel)
		Mode_3	[3]	640 x 480 YUV(4:2:2) Mode (16 bits/pixel)
		Mode_4	[4]	640 x 480 RGB Mode (24 bits/pixel)
		Mode_5	[5]	640 x 480 Y8 (Mono) Mode (8 bits/pixel)
		Mode_6	[6]	640 x 480 Y16 (Mono16) Mode (16 bits/pixel)
			[7-31]	Reserved
184h	V_MODE_INQ_1 (Format 1)	Mode_0	[0]	800 x 600 YUV(4:2:2) Mode (16 bits/pixel)
		Mode_1	[1]	800 x 600 RGB Mode (24 bits/pixel)
		Mode_2	[2]	800 x 600 Y (Mono) Mode (8 bits/pixel)
		Mode_3	[3]	1024 x 768 YUV(4:2:2) Mode (16 bits/pixel)
		Mode_4	[4]	1024 x 768 RGB Mode (24 bits/pixel)
		Mode_5	[5]	1024 x 768 Y (Mono) Mode (8 bits/pixel)
		Mode_6	[6]	800 x 600 Y (Mono16) Mode (16 bits/pixel)
		Mode_7	[7]	1024 x 768 Y (Mono16) Mode (16 bits/pixel)
			[8-31]	Reserved
188h	V_MODE_INQ_2 (Format 2)	Mode_0	[0]	1280 x 960 YUV(4:2:2) Mode (16 bits/pixel)
		Mode_1	[1]	1280 x 960 RGB Mode (24 bits/pixel)
		Mode_2	[2]	1280 x 960 Y (Mono) Mode (8 bits/pixel)
		Mode_3	[3]	1600 x 1200 YUV(4:2:2) Mode (16 bits/pixel)
		Mode_4	[4]	1600 x 1200 RGB Mode (24 bits/pixel)
		Mode_5	[5]	1600 x 1200 Y (Mono) Mode (8 bits/pixel)
		Mode_6	[6]	1280 x 960 Y (Mono16) Mode (16 bits/pixel)
		Mode_7	[7]	1600 x 1200 Y (Mono16) Mode (16 bits/pixel)
			[8-31]	Reserved
18Ch : 197h	Reserved			

Copyright ©2011-2012 Point Grey Research Inc.

Offset	Name	Field	Bit	Description
19Ch	V_MODE_INQ_7 (Format 7)	Mode_0	[0]	Format 7 Mode 0
		Mode_1	[1]	Format 7 Mode 1
		Mode_2	[2]	Format 7 Mode 2
		Mode_3	[3]	Format 7 Mode 3
		Mode_4	[4]	Format 7 Mode 4
		Mode_5	[5]	Format 7 Mode 5
		Mode_6	[6]	Format 7 Mode 6
		Mode_7	[7]	Format 7 Mode 7
			[8-31]	Reserved

A.2.6 Video Frame Rate Inquiry Registers

This set of registers allows the user to query the available frame rates for all Formats and Modes.

(Bit values = 0: Not Available, 1: Available)

Offset	Name	Field	Bit	Description
200h	V_RATE_INQ_0_0 (Format 0, Mode 0)	FrameRate_0	[0]	Reserved
		FrameRate_1	[1]	Reserved
		FrameRate_2	[2]	7.5 fps
		FrameRate_3	[3]	15 fps
		FrameRate_4	[4]	30 fps
		FrameRate_5	[5]	60 fps
		FrameRate_6	[6]	120 fps
		FrameRate_7	[7]	240 fps
			[8-31]	Reserved
204h	V_RATE_INQ_0_1 (Format 0, Mode 1)	FrameRate_0	[0]	1.875 fps
		FrameRate_1	[1]	3.75 fps
		FrameRate_2	[2]	7.5 fps
		FrameRate_3	[3]	15 fps
		FrameRate_4	[4]	30 fps
		FrameRate_5	[5]	60 fps
		FrameRate_6	[6]	120 fps
		FrameRate_7	[7]	240 fps
			[8-31]	Reserved
208h	V_RATE_INQ_0_2 (Format 0, Mode 2)	Same format as V_RATE_INQ_0_1 Register (Format 0, Mode 1)		
20Ch	V_RATE_INQ_0_3 (Format 0, Mode 3)	Same format as V_RATE_INQ_0_1 Register (Format 0, Mode 1)		

Copyright ©2011-2012 Point Grey Research Inc.

Offset	Name	Field	Bit	Description
210h	V_RATE_INQ_0_4 (Format 0, Mode 4)	Same format as V_RATE_INQ_0_1 Register (Format 0, Mode 1)		
214h	V_RATE_INQ_0_5 (Format 0, Mode 5)	Same format as V_RATE_INQ_0_1 Register (Format 0, Mode 1)		
218h	V_RATE_INQ_0_6 (Format 0, Mode 6)	Same format as V_RATE_INQ_0_1 Register (Format 0, Mode 1)		
21Ch : 21Fh	Reserved			
220h	V_RATE_INQ_1_0 (Format 1, Mode 0)	FrameRate_0	[0]	Reserved
		FrameRate_1	[1]	3.75 fps
		FrameRate_2	[2]	7.5 fps
		FrameRate_3	[3]	15 fps
		FrameRate_4	[4]	30 fps
		FrameRate_5	[5]	60 fps
		FrameRate_6	[6]	120 fps
		FrameRate_7	[7]	240 fps
			[8-31]	Reserved
224h	V_RATE_INQ_1_1 (Format 1, Mode 1)	Same format as V_RATE_INQ_0_0 Register (Format 0, Mode 0)		
228h	V_RATE_INQ_1_2 (Format 1, Mode 2)	Same format as V_RATE_INQ_0_0 Register (Format 0, Mode 0)		
22Ch	V_RATE_INQ_1_3 (Format 1, Mode 3)	FrameRate_0	[0]	1.875 fps
		FrameRate_1	[1]	3.75 fps
		FrameRate_2	[2]	7.5 fps
		FrameRate_3	[3]	15 fps
		FrameRate_4	[4]	30 fps
		FrameRate_5	[5]	60 fps
		FrameRate_6	[6]	120 fps
		FrameRate_7	[7]	Reserved
			[8-31]	Reserved

Copyright ©2011-2012 Point Grey Research Inc.

Offset	Name	Field	Bit	Description
230h	V_RATE_INQ_1_4 (Format 1, Mode 4)	FrameRate_0	[0]	1.875 fps
		FrameRate_1	[1]	3.75 fps
		FrameRate_2	[2]	7.5 fps
		FrameRate_3	[3]	15 fps
		FrameRate_4	[4]	30 fps
		FrameRate_5	[5]	60 fps
		FrameRate_6	[6]	Reserved
		FrameRate_7	[7]	Reserved
			[8-31]	Reserved
234h	V_RATE_INQ_1_5 (Format 1, Mode 5)	Same format as V_RATE_INQ_0_1 Register (Format 0, Mode 1)		
238h	V_RATE_INQ_1_6 (Format 1, Mode 6)	Same format as V_RATE_INQ_1_0 register (Format 1, Mode 0)		
23Ch	V_RATE_INQ_1_7 (Format 1, Mode 7)	Same format as V_RATE_INQ_1_3 register (Format 1, Mode 3)		
240h	V_RATE_INQ_2_0 (Format 2, Mode 0)	Same format as V_RATE_INQ_1_4 register (Format 1, Mode 4)		
244h	V_RATE_INQ_2_1 (Format 2, Mode 1)	Same format as V_RATE_INQ_1_4 register (Format 1, Mode 4)		
248h	V_RATE_INQ_2_2 (Format 2, Mode 2)	Same format as V_RATE_INQ_1_3 register (Format 1, Mode 3)		
24Ch	V_RATE_INQ_2_3 (Format 2, Mode 3)	Same format as V_RATE_INQ_1_4 register (Format 1, Mode 4)		
250h	V_RATE_INQ_2_4 (Format 2, Mode 4)	FrameRate_0	[0]	1.875 fps
		FrameRate_1	[1]	3.75 fps
		FrameRate_2	[2]	7.5 fps
		FrameRate_3	[3]	15 fps
		FrameRate_4	[4]	30 fps
		FrameRate_5	[5]	Reserved
		FrameRate_6	[6]	Reserved
		FrameRate_7	[7]	Reserved
			[8-31]	Reserved
254h	V_RATE_INQ_2_5 (Format 2, Mode 5)	Same format as V_RATE_INQ_1_3 register (Format 1, Mode 3)		
258h	V_RATE_INQ_2_6 (Format 2, Mode 6)	Same format as V_RATE_INQ_1_4 register (Format 1, Mode 4)		
25Ch	V_RATE_INQ_2_7 (Format 2, Mode 7)	Same format as V_RATE_INQ_1_4 register (Format 1, Mode 4)		

Copyright ©2011-2012 Point Grey Research Inc.

Offset	Name	Field	Bit	Description
260h : 2BFh	Reserved			
2E0h	V_CSR_INQ_7_0	Mode_0	[0-31]	CSR 32-bit offset for Format 7 Mode 0
2E4h	V_CSR_INQ_7_1	Mode_1	[0-31]	CSR 32-bit offset for Format 7 Mode 1
2E8h	V_CSR_INQ_7_2	Mode_2	[0-31]	CSR 32-bit offset for Format 7 Mode 2
2ECh	V_CSR_INQ_7_3	Mode_3	[0-31]	CSR 32-bit offset for Format 7 Mode 3
2F0h	V_CSR_INQ_7_4	Mode_4	[0-31]	CSR 32-bit offset for Format 7 Mode 4
2F4h	V_CSR_INQ_7_5	Mode_5	[0-31]	CSR 32-bit offset for Format 7 Mode 5
2F8h	V_CSR_INQ_7_6	Mode_6	[0-31]	CSR 32-bit offset for Format 7 Mode 6
2FCh	V_CSR_INQ_7_7	Mode_7	[0-31]	CSR 32-bit offset for Format 7 Mode 7
300h	V_CSR_INQ_7_8	Mode_8	[0-31]	CSR 32-bit offset for Format 7 Mode 8
304h	V_CSR_INQ_7_9	Mode_9	[0-31]	CSR 32-bit offset for Format 7 Mode 9
308h	V_CSR_INQ_7_10	Mode_10	[0-31]	CSR 32-bit offset for Format 7 Mode 10
30Ch	V_CSR_INQ_7_11	Mode_11	[0-31]	CSR 32-bit offset for Format 7 Mode 11
310h	V_CSR_INQ_7_12	Mode_12	[0-31]	CSR 32-bit offset for Format 7 Mode 12
314h	V_CSR_INQ_7_13	Mode_13	[0-31]	CSR 32-bit offset for Format 7 Mode 13
318h	V_CSR_INQ_7_14	Mode_14	[0-31]	CSR 32-bit offset for Format 7 Mode 14
31Ch	V_CSR_INQ_7_15	Mode_15	[0-31]	CSR 32-bit offset for Format 7 Mode 15
320h	V_CSR_INQ_7_16	Mode_16	[0-31]	CSR 32-bit offset for Format 7 Mode 16
324h	V_CSR_INQ_7_17	Mode_17	[0-31]	CSR 32-bit offset for Format 7 Mode 17
328h	V_CSR_INQ_7_18	Mode_18	[0-31]	CSR 32-bit offset for Format 7 Mode 18
32Ch	V_CSR_INQ_7_19	Mode_19	[0-31]	CSR 32-bit offset for Format 7 Mode 19
330h	V_CSR_INQ_7_20	Mode_20	[0-31]	CSR 32-bit offset for Format 7 Mode 20
334h	V_CSR_INQ_7_21	Mode_21	[0-31]	CSR 32-bit offset for Format 7 Mode 21
338h	V_CSR_INQ_7_22	Mode_22	[0-31]	CSR 32-bit offset for Format 7 Mode 22
33Ch	V_CSR_INQ_7_23	Mode_23	[0-31]	CSR 32-bit offset for Format 7 Mode 23
340h	V_CSR_INQ_7_24	Mode_24	[0-31]	CSR 32-bit offset for Format 7 Mode 24
344h	V_CSR_INQ_7_25	Mode_25	[0-31]	CSR 32-bit offset for Format 7 Mode 25
348h	V_CSR_INQ_7_26	Mode_26	[0-31]	CSR 32-bit offset for Format 7 Mode 26
34Ch	V_CSR_INQ_7_27	Mode_27	[0-31]	CSR 32-bit offset for Format 7 Mode 27
350h	V_CSR_INQ_7_28	Mode_28	[0-31]	CSR 32-bit offset for Format 7 Mode 28
354h	V_CSR_INQ_7_29	Mode_29	[0-31]	CSR 32-bit offset for Format 7 Mode 29
358h	V_CSR_INQ_7_30	Mode_30	[0-31]	CSR 32-bit offset for Format 7 Mode 30
35Ch	V_CSR_INQ_7_31	Mode_31	[0-31]	CSR 32-bit offset for Format 7 Mode 31

A.3 Video Mode Control and Status Registers

These registers provide partial image size format (Format 7, Mode x) information.

Copyright ©2011-2012 Point Grey Research Inc.

A.3.1 FORMAT_7_RESIZE_INQ: 1AC8h

This register reports all internal camera processes being used to generate images in the current video mode. For example, users can read this register to determine if pixel binning and/or subsampling is being used to achieve a non-standard custom image size.

This register is read-only.

Format:

Field	Bit	Description
Presence_Inq	[0]	Presence of this feature 0: Not Available, 1: Available
	[1-7]	Reserved
Num_Cols	[8-11]	Number of columns being binned/subsampled, minus 1 (e.g., if combining 4 columns together, this register will report a value of 3)
Num_Rows	[12-15]	Number of rows binned/subsampled, minus 1 (e.g., if combining 4 columns together, this register will report a value of 3)
	[16-23]	Reserved
V_Pre_Color	[24]	Vertical subsampling/downsampling performed before color processing 0: Off, 1: On
H_Pre_Color	[25]	Horizontal subsampling/downsampling performed before color processing 0: Off, 1: On
V_Post_Color	[26]	Vertical subsampling/downsampling performed after color processing 0: Off, 1: On
H_Post_Color	[27]	Horizontal subsampling/downsampling performed after color processing 0: Off, 1: On
V_Bin	[28]	Standard vertical binning (addition of adjacent lines within horizontal shift register) 0: Off, 1: On
H_Bin	[29]	Standard horizontal binning (addition of adjacent lines within horizontal shift register) 0: Off, 1: On
V_Bayer_Bin	[30]	Vertical bayer binning (addition of adjacent even/odd lines within the interline transfer buffer) 0: Off, 1: On
H_Bayer_Bin	[31]	Horizontal bayer binning (addition of adjacent even/odd columns within the horizontal shift register) 0: Off, 1: On

A.3.2 Inquiry Registers for Custom Video Mode Offset Addresses

The following set of registers indicates the locations of the custom video mode base registers. These offsets are relative to the base offset 0xFFFF F0F0 0000.

Copyright ©2011-2012 Point Grey Research Inc.

Table A.1: Custom Video Mode Inquiry Register Offset Addresses

Offset	Name	Field	Bit	Description
2E0h	V_CSR_INQ_7_0	Mode_0	[0-31]	32-bit offset for Mode 0
2E4h	V_CSR_INQ_7_1	Mode_1	[0-31]	32-bit offset for Mode 1
2E8h	V_CSR_INQ_7_2	Mode_2	[0-31]	32-bit offset for Mode 2
2ECh	V_CSR_INQ_7_3	Mode_3	[0-31]	32-bit offset for Mode 3
2F0h	V_CSR_INQ_7_4	Mode_4	[0-31]	32-bit offset for Mode 4
2F4h	V_CSR_INQ_7_5	Mode_5	[0-31]	32-bit offset for Mode 5
2F8h	V_CSR_INQ_7_6	Mode_6	[0-31]	32-bit offset for Mode 6
2FCh	V_CSR_INQ_7_7	Mode_7	[0-31]	32-bit offset for Mode 7
300h	V_CSR_INQ_7_8	Mode_8	[0-31]	32-bit offset for Mode 8



To calculate the base address for an offset CSR:

1. *Query the offset inquiry register.*
2. *Multiple the value by 4. (The value is a 32-bit offset.)*
3. *Remove the 0xF prefix from the result. (i.e., F70000h becomes 70000h)*

A.3.2.1 Image Size and Position

These registers are inquiry registers for maximum image size and unit size, and to determine an area of required data.

Format:

Address	Name	Field	Bit	Description
Base + 000h	MAX_IMAGE_SIZE_INQ	Hmax	[0-15]	Maximum horizontal pixel number Hmax = Hunit * n = Hposunit*n3 (n, n3 are integers)
		Vmax	[16-31]	Maximum vertical pixel number Vmax = Vunit * m = Vposunit*m3 (m, m3 are integers)
Base + 004h	UNIT_SIZE_INQ	Hunit	[0-15]	Horizontal unit pixel number
		Vunit	[16-31]	Vertical unit pixel number
Base + 04Ch	UNIT_POSITION_INQ	Hposunit	[0-15]	Horizontal unit pixel number for position If read value of Hposunit is 0, Hposunit = Hunit for IIDC 1.20 compatibility.
		Vposunit	[16-31]	Vertical unit number for position If read value of Vposunit is 0, Vposunit = Vunit for IIDC 1.20 compatibility.
Base + 008h	IMAGE_POSITION	Left	[0-15]	Left position of requested image region (pixels) Left = Hposunit * n1 Left + Width <= Hmax
		Top	[16-31]	Top position of requested image region (pixels) Top = Vposunit * m1 Top + Height <= Vmax

Copyright ©2011-2012 Point Grey Research Inc.

Address	Name	Field	Bit	Description
Base + 00Ch	IMAGE_SIZE	Width	[0-15]	Width of requested image region (pixels) Width = Hunit * n2
		Height	[16-31]	Height of requested image region (pixels) Height = Vunit * m2 (n1, n2, m1, m2 are integers)

A.3.2.2 COLOR_CODING_ID and COLOR_CODING_INQ

The COLOR_CODING_INQ register describes the color-coding capability of the system. Each coding scheme has its own ID number. The required color-coding scheme must be set to COLOR_CODING_ID register as the ID number.

Format:

Address	Name	Field	Bit	Description	ID
Base + 010h	COLOR_CODING_ID	Coding_ID	[0-7]	Color coding ID from COLOR_CODING_INQ register	N/A
			[8-31]	Reserved	N/A
Base + 014h	COLOR_CODING_INQ	Mono8	[0]	Y only. Y=8bits, non compressed	0
		4:1:1 YUV8	[1]	4:1:1, Y=U=V= 8bits, non compressed	1
		4:2:2 YUV8	[2]	4:2:2, Y=U=V=8bits, non compressed	2
		4:4:4 YUV8	[3]	4:4:4, Y=U=V=8bits, non compressed	3
		RGB8	[4]	R=G=B=8bits, non compressed	4
		Mono16	[5]	Y only, Y=16bits, non compressed	5
		RGB16	[6]	R=G=B=16bits, non compressed	6
		Signed Mono16	[7]	Y only, Y=16 bits, non compressed (signed integer)	7
		Signed RGB16	[8]	R=G=B=16 bits, non compressed (signed integer)	8
		Raw8	[9]	Raw data output of color filter sensor, 8 bits	9
		Raw16	[10]	Raw data output of color filter sensor, 16 bits	10
		Mono12	[11]	Y only. Y=12 bits, non compressed	
		Raw12	[12]	Raw data output of color filter sensor, 12 bits	
			[13-31]	Reserved	11-31

A.3.2.3 PACKET_PARA_INQ, BYTE_PER_PACKET, and PACKET_PER_FRAME

If the *Presence* bit in the VALUE_SETTING register (page 148) is zero, values of these fields will be updated by writing the new value to the IMAGE_POSITION, IMAGE_SIZE (page 145) and COLOR_CODING_ID (page 146) registers with the value of the ISO_Speed register (page 91).

First, the ISO_Speed register must be written. Then the IMAGE_POSITION, IMAGE_SIZE and COLOR_CODING_ID registers should be updated.

If the *Presence* bit in the VALUE_SETTING register is one, the values of these fields will be updated by writing one to the *Setting_1* bit in the VALUE_SETTING register. If the *ErrorFlag_1* bit is zero after the *Setting_1* bit returns to zero, the values of these fields are valid.

Copyright ©2011-2012 Point Grey Research Inc.

Format:

Address	Name	Field	Bit	Description
Base + 034h	PIXEL_NUMBER_INQ	PixelPerFrame	[0-31]	Total number of pixels in the required image area
Base + 038h	TOTAL_BYTES_HI_INQ	BytesPerFrameHi	[0-31]	Higher 32-bits of total bytes of image data per frame
Base + 03Ch	TOTAL_BYTES_LO_INQ	BytesPerFrameLo	[0-31]	Lower 32-bits of total bytes of image data per frame
Base + 040h	PACKET_PARA_INQ	UnitBytePerPacket	[0-15]	Minimum bytes per packet; packet sizes must be multiples of the minimum
		MaxBytePerPacket	[16-31]	Maximum bytes per packet
Base + 044h	BYTE_PER_PACKET	BytePerPacket	[0-15]	Packet size. This value determines the real packet size and transmission speed for one frame image. BytePerPacket = UnitBytePerPacket * n BytePerPacket <= MaxBytePerPacket If BytePerPacket * n != Bytes Per Frame‡, you must use padding. (n is an integer)
		RecBytePerPacket	[16-31]	Recommended bytes per packet. If this value is zero, ignore this field.
Base + 048h	PACKET_PER_FRAME_INQ	PacketPerFrame	[0-31]	Number of packets per frame. Updated after BytePerPacket is written. Total number of bytes of transmission data per one frame = BytePerPacket * PacketPerFrame Number of bytes of padding = BytePerPacket * PacketPerFrame - Bytes Per Frame‡. The receiver must ignore the above padding in the last packet of each frame.
‡Example: Bytes Per Frame = Resolution Size * 1 byte per pixel = 640 * 480 = 307200 bytes per frame				

A.3.2.4 FRAME_INTERVAL_INQ

Format:

Address	Name	Field	Bit	Description
Base + 050h	FRAME_INTERVAL_INQ	FrameInterval	[0-31]	Current frame interval (seconds) based on the current camera conditions, including exposure time. The reciprocal value of this (1 / FrameInterval) is the frame rate of the camera. IEEE/REAL*4 floating-point value (see *Determining Absolute Value Register Values*(page 148) If 0, the camera can't report the value and it should be ignored.

Copyright ©2011-2012 Point Grey Research Inc.

A.3.2.5 VALUE_SETTING

The purpose of the *Setting_1* bit is for updating the TOTAL_BYTES_HI_INQ, TOTAL_BYTES_LO_INQ, PACKET_PARA_INQ and BYTE_PER_PACKET (page 146) registers. If one of the values in the IMAGE_POSITION, IMAGE_SIZE (page 145) COLOR_CODING_ID (page 146) and ISO_SPEED (page 91) registers is changed, the *Setting_1* bit must be set to 1.

Format:

Address	Name	Field	Bit	Description
Base + 07Ch	VALUE_SETTING	Presence	[0]	If this bit is 1, Setting_1 , ErrorFlag_1 and ErrorFlag_2 fields are valid. This bit is read only.
		Setting_1	[1]	If writing "1" to this bit, IMAGE_POSITION, IMAGE_SIZE, COLOR_CODING_ID and ISO_Speed register value will be reflected in PIXEL_NUMBER_INQ, TOTAL_BYTES_HI_INQ, TOTAL_BYTES_LO_INQ, PACKET_PARA_INQ and BYTE_PER_PACKET registers. This bit is self-cleared.
			[2-7]	Reserved
		ErrorFlag_1	[8]	Combination of the values of IMAGE_POSITION, IMAGE_SIZE, COLOR_CODING_ID and ISO_Speed register is not acceptable. 0: no error, 1: error This flag will be updated every time Setting_1 bit returns to "0" from "1".
		ErrorFlag_2	[9]	BytePerPacket value is not acceptable. 0: no error, 1: error Updated after BytePerPacket value is written. If 0, transmission can be started.
			[10-31]	Reserved

A.4 Absolute Value Registers

Many Point Grey cameras implement “absolute” modes for various camera settings that report real-world values, such as shutter time in seconds (s) and gain value in decibels (dB). Using these absolute values is easier and more efficient than applying complex conversion formulas to the information in the *Value* field of the associated Control and Status Register. A relative value does not always translate to the same absolute value. Two properties that can affect this relationship are pixel clock frequency and horizontal line frequency. These properties are, in turn, affected by such properties as resolution, frame rate, region of interest (ROI) size and position, and packet size. Additionally, conversion formulas can change between firmware versions. Point Grey therefore recommends using absolute value registers, where possible, to determine camera values.

A.4.1 Setting Absolute Value Register Values

For absolute values to be used, the associated feature CSR must be set to use absolute values.

Copyright ©2011-2012 Point Grey Research Inc.

Field	Bit	Description
Abs_Control	[1]	Absolute value control 0: Control with the value in the Value field 1: Control with the value in the Absolute value CSR. If this bit = 1, the value in the Value field is read-only.

In the FlyCapture API, this can also be done by setting the `absControl` member of the of the desired property structure to true.

A.4.2 Absolute Value Offset Addresses

The following set of registers indicates the locations of the absolute value registers. Not all cameras use all registers.



To calculate the base address for an offset CSR:

1. *Query the offset inquiry register.*
2. *Multiple the value by 4. (The value is a 32-bit offset.)*
3. *Remove the 0xF prefix from the result. (i.e., F70000h becomes 70000h)*

32-bit Offsets for Absolute Value Registers

Offset	Name	Bit	Description
700h	ABS_CSR_HI_INQ_0	[0..31]	Brightness
704h	ABS_CSR_HI_INQ_1	[0..31]	Auto Exposure
708h	ABS_CSR_HI_INQ_2	[0..31]	Sharpness
710h	ABS_CSR_HI_INQ_4	[0..31]	Hue
714h	ABS_CSR_HI_INQ_5	[0..31]	Saturation
718h	ABS_CSR_HI_INQ_6	[0..31]	Gamma
71Ch	ABS_CSR_HI_INQ_7	[0..31]	Shutter
720h	ABS_CSR_HI_INQ_8	[0..31]	Gain
724h	ABS_CSR_HI_INQ_9	[0..31]	Iris
734h	ABS_CSR_HI_INQ_13	[0..31]	Trigger Delay
73Ch	ABS_CSR_HI_INQ_15	[0..31]	Frame Rate
7C4h	ABS_CSR_LO_INQ_1	[0..31]	Pan
7C8h	ABS_CSR_LO_INQ_2	[0..31]	Tilt

Each set of absolute value CSRs consists of three registers as follows:

Offset	Name	Field	Bit	Description
Base + 000h	Absolute Value	Min_Value	[0-31]	Minimum value for this feature. Read only.
Base + 004h		Max_Value	[0-31]	Maximum value for this feature. Read only.
Base + 008h		Value	[0-31]	Current value of this feature.

Copyright ©2011-2012 Point Grey Research Inc.

For example:

Offset	Name	Field	Bit	Description
704h	ABS_CSR_HI_INQ_1		[0..31]	Auto Exposure.
Base + 0h	ABS_VAL_AUTO_EXPOSURE	Min_Value	[0-31]	Min auto exposure value.
Base + 4h		Max_Value	[0-31]	Max auto exposure value.
Base + 8h		Value	[0-31]	Current auto exposure value.

A.4.3 Units of Value for Absolute Value CSR Registers

The following tables describe the real-world units that are used for the absolute value registers. Each value is either Absolute (value is an absolute value) or Relative (value is an absolute value, but the reference is system dependent).

Feature	Function	Unit	Unit Description	Reference point	Value Type
Brightness	Black level offset	%		----	Absolute
Auto Exposure	Auto Exposure	EV	exposure value	0	Relative
Hue	Hue	deg	degree	0	Relative
Saturation	Saturation	%		100	Relative
Shutter	Integration time	s	seconds	----	Absolute
Gain	Circuit gain	dB	decibel	0	Relative
Iris	Iris	F	F number	----	Absolute
Trigger_Delay	Trigger Delay	S	seconds	----	Absolute
Frame_Rate	Frame rate	fps	frames per second	----	Absolute

A.4.4 Determining Absolute Value Register Values

The Absolute Value CSRs store 32-bit floating-point values with IEEE/REAL*4 format. To programmatically determine the floating point equivalents of the minimum, maximum and current hexadecimal values for a property such as shutter, using the FlyCapture SDK:

1. Read the ABS_CSR_HI_INQ_7 register 71Ch to obtain the 32-bit offset for the absolute value CSR for shutter.
```
cam.ReadRegister(context, 0x71C, &ulValue);
```
2. The ulValue is a 32-bit offset, so multiply by 4 to get the actual offset.
```
ulValue = ulValue * 4; // ulValue == 0x3C0244, actual offset == 0xF00910
```

This offset represents the offset from the base address 0xFFFF Fxxx xxxx. Since the PGR FlyCapture API automatically takes into account the base offset 0xFFFF F0F0 0000, the actual offset in this example would be 0x910.

3. Use the offset obtained to read the min, max and current absolute values and convert the 32-bit hexadecimal values to floating point.
```
// declare a union of a floating point and unsigned long
typedef union _AbsValueConversion
{
      unsigned long ulValue;
```


Copyright ©2011-2012 Point Grey Research Inc.

```
        float fValue;
} AbsValueConversion;
float fMinShutter, fMaxShutter, fCurShutter;AbsValueConversion minShutter,
maxShutter, curShutter;
// read the 32-bit hex value into the unsigned long member
cam.ReadRegister(context, 0x910, &minShutter.ulValue );
cam.ReadRegister(context, 0x914, &maxShutter.ulValue );
cam.ReadRegister(context, 0x918, &curShutter.ulValue );
fMinShutter = minShutter.fValue;
fMaxShutter = maxShutter.fValue;
fCurShutter = curShutter.fValue;
```



To get and set absolute values using the FlyCapture SDK, use the `GetProperty` *and* `SetProperty` *functions to get or set the* `absValue` *member of the* `Property` *struct. Refer to the FlyCapture SDK Help for function definitions.*

Copyright ©2011-2012 Point Grey Research Inc.

Contacting Point Grey Research

For any questions, concerns or comments please contact us via the following methods:

Email	General questions about Point Grey Research Technical support (existing customers only)	
Knowledge Base	Find answers to commonly asked questions in our Knowledge Base	
Downloads	Download the latest documents and software	
Main Office	Point Grey Research, Inc. 12051 Riverside Way Richmond, BC, Canada V6W 1K7	**Tel:** +1 (604) 242-9937 **Toll Free** +1 (866) 765-0827 (North America only) **Fax:** +1 (604) 242-9938 **Email:** sales@ptgrey.com
USA		**Tel**: +1 (866) 765-0827 **Email:**na-sales@ptgrey.com
Europe and Israel	Point Grey Research GmbH Schwieberdinger Strasse 60 71636 Ludwigsburg Germany	**Tel:** +49 7141 488817-0 **Fax:** +49 7141 488817-99 **Email:**eu-sales@ptgrey.com
Distributors		
Japan	ViewPLUS Inc	www.viewplus.co.jp
Korea	Cylod Co. Ltd.	www.cylod.com
China	LUSTER LightVision Tech. Co., Ltd.	www.lusterlighttech.com
Singapore, Malaysia & Thailand	Voltrium Systems Pte Ltd.	www.voltrium.com.sg
Taiwan	Apo Star Co., Ltd.	www.apostar.com.tw
United Kingdom	ClearView Imaging Ltd,	www.clearviewimaging.co.uk

Copyright ©2011-2012 Point Grey Research Inc.

Revision History

Revision	Date	Notes
1.0	September 22, 2011	Initial Document Version with support for model FL3-U3-32S2
2.0	November 25, 2011	Added support for model FL3-U3-13S2
2.1	November 29, 2011	Fixed broken links to knowledge base articles Consolidated Specifications layout (no change to specifications data)
2.2	December 14, 2011	Removed Trigger Mode 14 which is not supported
2.3	January 30, 2012	Updated Frame Rate table for FL3-U3-32S2 Clarified Format 7 Mode 7 does not improve imaging performance
3.0	May 4, 2012	Added support for model FL3-U3-13Y3 Added installation instructions Added Imaging Performance Specifications Added register for FPN Correction Minor edits and clarifications
3.1	May 24, 2012	Removed broken graph
3.2	May 28, 2012	Removed Imaging Performance table for FL3-U3-13Y3; test data not yet available
4.0	June 5, 2012	Added support for model FL3-U3-88S2 Added chapter for Input/Output control
5.0	August 22, 2012	Added support for model FL3-U3-13E4 Updated Imaging Performance and QE graphs; added Dynamic Range comparison Added Mode 10 for FL3-U3-88S2 (allows 12 MP) Clarified FL3-U3-88S2 supports global reset on rolling shutter Added section on pixel formats Updated ADC section Verified video mode descriptions and frame rates for all models
5.1	August 27, 2012	Fixed Chapter numbering
5.2	September 27, 2012	Removed unsupported trigger mode Added sections on Global Shutter, Rolling Shutter, Global Reset, and Output Trigger

Copyright ©2011-2012 Point Grey Research Inc.

Index

1

16-bit Mono data format 68

A

absolute value mode 26, 148

absolute values

shutter conversion 112 .....

AE_ROI register 1A70-1A74h 115

API

camera control 25 .....

artifacts 127

asynchronous trigger 81

between trigger behavior 83 .....

ensuring trigger armed 88 .....

minimum pulse length 82 .....

timing 81 .....

asynchronous trigger mode (GPIO) 42

auto exposure on ROI 115

AUTO_EXPOSURE register 804h 114

B

back flange distance 15

bandwidth

maximum cameras on bus 27 .....

base address 130

basic functions

inquiry registers 133 .....

Bayer Tile color conversion 117

BAYER_MONO_CTRL register 1050h 68

BAYER_TILE_MAPPING register 1040h 118

binning 63

black level 95

blemish pixels 127

brightness 95

variable in images 128 .....

BRIGHTNESS register 800h 95

buffer 35

bulb shutter trigger mode 84

C

C-mount lens 15

cable length 21

calculating register offset 133

camera control

flycap program 25 .....

FlyCapture API 25 .....

camera model 30

camera setting conversion formulas 26, 148

camera settings embedded in image 119

CAMERA_log register 1D00 - 1Dffh 124

circuit

GPIO bi-directional 61 .....

GPIO opto-isolated input 59 .....

GPIO opto-isolated output 60 .....

color conversion 117

color interpolation 117

color processing 117

config ROM registers 131

Copyright ©2011-2012 Point Grey Research Inc.

configuration sets 32
conversion formulas for camera settings 26, 148
CS-mount lens 15
CSR base address 130
CURRENT register 1A58h - 1A5Ch 31
CURRENT_FRAME_RATE register 600h 77
CURRENT_VIDEO_FORMAT register 608h 78
CURRENT_VIDEO_MODE register 604h 78
custom image modes 63

D

data flash 38
data formats
customizable (Format_7) 63 .....
data modes
customizable 63 .....
DATA_DEPTH register 630h 68
DATA_FLASH_CTRL register 1240h 38
DATA_FLASH_DATA register 1244h 38
dead pixels 127
debouncer 82
device information 29
digital signal debouncer 82
Dimensional drawings
tripod adapter 15 .....
drivers;configuring 27
dust protection 16

E

embedded image information 119
endianness
Y16 data 68 .....
environmental conditions 16
error flags 148
exposure time 111
extended shutter 112
external trigger 81
between trigger behavior 83 .....
ensuring trigger armed 88 .....
minimum duration 82 .....
timing 81 .....
external trigger mode (GPIO) 42

F

factory defaults 32
failed frame transmission count 124
feature elements
inquiry registers 136 .....
feature presence
inquiry registers 134 .....
filter 17
firmware
upgrading 39 .....
FIRMWARE_BUILD_DATE register 1F64h 40
FIRMWARE_DESCRIPTION register 1F68h-1F7Ch 40
FIRMWARE_VERSION register 1F60h 39
flash memory 38
flipped image 119
flycap program 25
FlyCapture API 25

Copyright ©2011-2012 Point Grey Research Inc.

Format_7 63
FORMAT_7_RESIZE_INQ register 1AC8h 144
formats
changing while triggering 83 .....
customizable (Format_7) 63 .....
FPN_CTRL register 1A0Ch 129
frame buffer 35
frame rate, partial image mode 147
FRAME_INFO register 12F8h 120
FRAME_RATE register 83Ch 76

G

gain 96, 101
GAIN register 820h 97
gamma 103
GAMMA register 818h 105
global reset mode 128
GPIO 21, 41
bidirectional circuit 61 .....
electrical characteristics 59 .....
external trigger mode 42 .....
input mode 41 .....
opto-isolated input circuit 59 .....
opto-isolated outputcircuit 60 .....
output mode 41 .....
pulse width modulation (PWM) mode 42, 50 .....
strobe mode 42 .....
strobe start control 49 .....
GPIO_CTRL_PIN 50
GPIO_STRPAT_CTRL register 110Ch 48
GPIO_STRPAT_MASK_PIN 49
GPIO_XTRA register 1104h 49
GPIO_XTRA_PIN register 51
greyscale conversion 117

H

heat dissipation 18
hexadecimal format 25
HORIZONTAL_LINE_FREQ register 1AF4h 32
host adapter card 20
hot pixels 127
hue 100
HUE register 810h 100

I

image information embedded 119
IMAGE_RETRANSMIT register 634h 36
information
device 29 .....
infrared (IR) cutoff filter 17
INITIALIZE register 000h 123
input circuit 59
input mode (GPIO) 41
input pins 59
inquiry registers
basic functions 133 .....
feature elements 136 .....
feature presence 134 .....
integration time 111
ISO_CHANNEL / ISO_SPEED register 60Ch 91
ISO_EN/CONTINUOUS_SHOT register 614h 92

Copyright ©2011-2012 Point Grey Research Inc.

L

LED_CTRL register 1A14h 125

lens

compatibility 15 .....

log 124

long shutter 112

lookup table 103

LUT 103

LUT registers 80000h - 80048h 106

M

MAIN_BOARD_INFO regiser 1F24h 30

maximum cameras on bus 27

memory

flash memory 38 .....

memory channels 32

mirror image 119

MIRROR_IMAGE_CTRL register 1054h 119

modes (video) 63

monochrome conversion 117

motion blur 128

mounting 16

camera case 16 .....

tripod adapter 16 .....

multi-shot trigger mode 85

O

offset 95, 133

ONE_SHOT/MULTI_SHOT register 61Ch 92

optocoupler 59

output circuit 60

output mode (GPIO) 41

output pins 59

output pulse 42

P

partial image modes 63

PCI card 20

PGM file format for Y16 images 68

physical description 13

pinout

GPIO 21, 41 .....

PIO_DIRECTION register 11F8h 91

pixel binning 63

PIXEL_CLOCK_FREQ register 1AF0h 32

PIXEL_DEFECT_CTRL register 1A60h 127

presence of features

inquiry registers 134 .....

pulse width modulation (PWM) mode (GPIO) 42, 50

Q

quadlet offsets 133

R

raw Bayer data 70, 72, 74-75

raw data

accessing 117 .....

interpolating 117 .....

region of interest (ROI) 63

region of interest exposure 115

registers

absolute value 26, 148 .....

calculating address 133 .....

Copyright ©2011-2012 Point Grey Research Inc.

config ROM 131
control and status (CSRs) 25
inquiry 26, 133
memory map 130
registers commonly accessed
AE_ROI 1A70-1A74h 115
AUTO_EXPOSURE 804h 114
BAYER_MONO_CTRL 1050h 68
BAYER_TILE_MAPPING 1040h 118
BRIGHTNESS 800h 95
CAMERA_LOG 1D00 - 1DFFh 124
CURRENT 1A58h - 1A5Ch 31
CURRENT_VIDEO_FORMAT 608h 78
CURRENT_VIDEO_MODE 604h 78
DATA_DEPTH 630h 68
DATA_FLASH_CTRL 1240h 38
DATA_FLASH_DATA 1244h 38
FIRMWARE_BUILD_DATE 1F64h 40
FIRMWARE_DESCRIPTION 1F68 - 1F7Ch 40
FIRMWARE_VERSION 1F60h 39
FRAME_INFO 12F8h 120
FRAME_RATE 83Ch 76
GAIN 820h 97
GAMMA 818h 105
GPIO_CTRL_PIN 50
GPIO_STRPAT_CTRL 110Ch 48
GPIO_STRPAT_MASK_PIN 49
GPIO_XTRA 1104h 49
GPIO_XTRA_PIN 51
HORIZONTAL_LINE_FREQ 1AF4h 32
HUE 810h 100
IMAGE_RETRANSMIT 634h 36
INITIALIZE 000h 123
ISO_CHANNEL / ISO_SPEED 60Ch 91
ISO_EN / CONTINUOUS_SHOT 614h 92
LED_CTRL 1A14h 125
LUT 80000h - 80048h 106
MAIN_BOARD_INFO 1F24h 30
MIRROR_IMAGE_CTRL 1054h 119
ONE_SHOT / MULTI_SHOT 61Ch 92
PIO_DIRECTION 11F8h 91
PIXEL_CLOCK_FREQ 1AF0h 32
PIXEL_DEFECT_CTRL 1A60h 127
SATURATION 814h 98
SENSOR_BOARD_INFO 1F28h 31
SERIAL_NUMBER 1F20h 30
SHARPNESS 808h 102
SHUTTER 81Ch 112
SOFTWARE_TRIGGER 62Ch 91
TEMPERATURE 82Ch 32
TEST_PATTERN 104Ch 126
TIME_FROM_BUS_RESET 12E4h 123
TIME_FROM_INITIALIZE 12E0h 123
TRIGGER_DELAY 834h 90
TRIGGER_MODE 830h 90
VMODE_ERROR_STATUS 628h 124
VOLTAGE 1A50h - 1A54h 31
WHITE_BALANCE 80Ch 110

Copyright ©2011-2012 Point Grey Research Inc.

XMIT_FAILURE 12FCh 124
reset camera to default settings 123, 131-132
retransmitting images 35
rolling shutter artifacts 128

S

saturation 98
SATURATION register 814h 98
saving camera settings 32
SENSOR_BOARD_INFO register 1F28 31
SERIAL_NUMBER register 1F20h 30
settings embedded in image 119
sharpness 101
SHARPNESS register 808h 102
shutter 111
absolute value conversion 112
extended 112
relation to frame rate 111
SHUTTER register 81Ch 112
signal debouncer 82
signal to noise ratio 68
SOFTWARE_TRIGGER register 62Ch 91
standard external trigger mode 84
strobe mode (GPIO) 42
strobe output functionality 42
subsampling 63
switch noise 128

T

temperature 18
TEMPERATURE register 82Ch 32
TEST_PATTERN register 104C 126
TIME_FROM_BUS_RESET register 12E4h 123
TIME_FROM_INITIALIZE register 12E0h 123
timestamp 120
transmission failure
frame count 124
transmitting images 35
trigger 81
between trigger behavior 83
changing video modes during 83
ensuring trigger armed 88
minimum duration 82
timing 81
TRIGGER_DELAY register 834h 90
TRIGGER_MODE register 830h 90
Trigger_Mode_0 84
Trigger_Mode_1 84
Trigger_Mode_15 85
tripod adapter
dimensional drawings 15
mounting 16
troubleshooting 124

V

value field for CSR registers 26
video modes 63
VMODE_ERRO_STATUS register 628h 124
VOLTAGE register 1A50h - 1A54h 31

W

white balance 109

Copyright ©2011-2012 Point Grey Research Inc.

white pixels 127

WHITE_BALANCE register 80Ch 110

X

XMIT_FAILURE register 12FCh 124

Y

Y16 data format 68

Copyright ©2011-2012 Point Grey Research Inc.